POSITAL
FRABA

POSITION AND MOTION SENSORS

50 YEARS ABSOLUTE ROTARY ENCODERS
POSITAL FRABA
1963–2013

GLOBAL PRESENCE

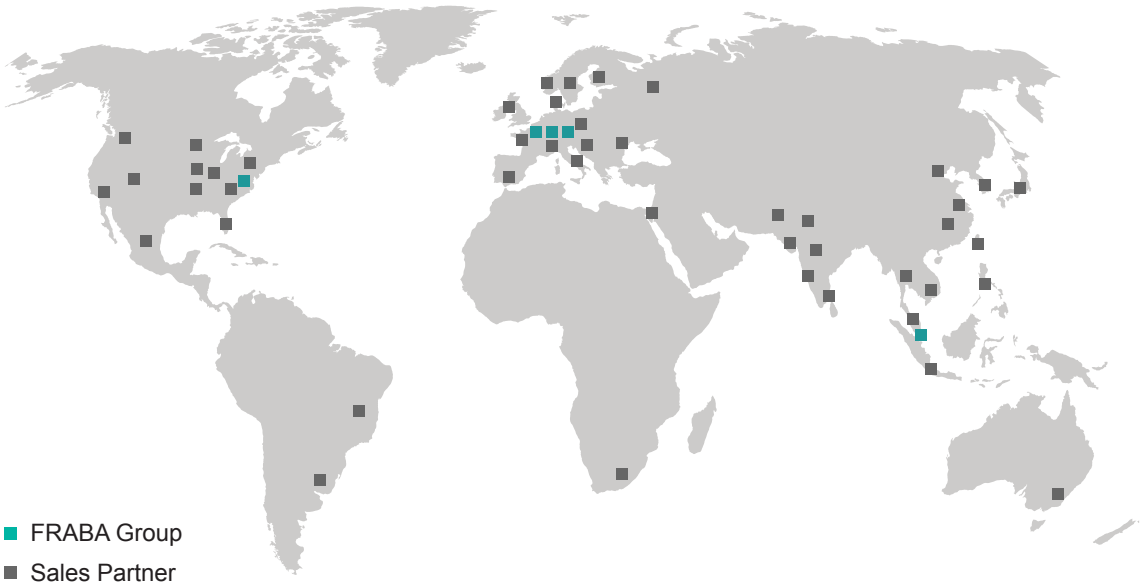

Please visit our website for partner contacts in all countries as the list is constantly growing.

COMPANY

FRABA Group

FRABA is a group of enterprises focused on providing advanced products for the motion control and industrial automation markets. POSITAL has been a leading manufacturer of absolute rotary encoders for over 50 years and recently has expanded its business to inclination and linear sensors. Other FRABA Group subsidiaries include VITECTOR which focuses on protection sensors to guard doors and production machine covers.

History

FRABA was founded by Franz Baumgartner in 1918. Until the 1960s, FRABA's main product was mechanical relays. In 1963 FRABA started selling "brush" absolute encoders and in 1973 one the first non-contact, optical absolute rotary encoders was manufactured in the offices of FRABA in Cologne. Today, FRABA companies specialize in innovative products that use advanced technologies to deliver exceptional performance and value.

Service

Absolute rotary encoders are sophisticated devices that can help solve a wide range of technical problems. However, realizing the full potential of these products may require specialized knowledge when selecting the device configuration and programming the operating parameters. To ensure that customers get what they need, POSITAL's development engineers in Germany, the US and Asia have direct responsibility for customer support. In addition, a growing global network of sales partners is providing expert guidance with knowledge about the local requirements.

Production

POSITAL products are manufactured in advanced production facilities. The computer-guided semi-automated production system tracks each device from order, through assembly and testing, to final delivery. Even with thousands of unique configurations available, standard products are ready to ship within five working days of receiving an order.

CONTENT

Version 20130828

PRODUCTS

IXARC Rotary Encoders

Motion control applications – ranging from factory automation to mobile machinery – require accurate, realtime information about the location of mechanical equipment. The IXARC line of absolute rotary encoders provide precise and reliable measurement of the angular positions of joints, drive shafts, pulleys, etc... Available electronic connections range from simple analog outputs to sophisticated fieldbus and Industrial Ethernet interfaces.

TILTIX Inclinometers

Accurate measurement of tilt or inclination is very important for motion control and safety systems. Inclinometers provide single or dual-axis angle measurement in an economical package. Relying on gravity for their measurement, these sensors have no exposed moving parts, resulting in easy mounting and high environmental protection.

LINARIX Linear Sensors

Many applications require linear motion to be monitored for system control or to ensure safety. With lengths ranging from 1 m to 10 m (3' to 33'), LINARIX draw wire sensors are available in many configurations to meet an application's requirements. Options include a wide variety of outputs (including analog, fieldbus and Ethernet variants), heavy duty housings and compact designs.

Accessories

POSITAL offers a wide variety of accessories that simplify sensor installation. Mating connectors of different styles and lengths ensure proper electrical connections. Using appropriate mounting accessories minimize wear and tear on encoders and help to ensure a long and reliable life cycle. Interface modules and displays are also available to provide users with immediate access to measurements.

APPLICATION EXAMPLES




Mining

The convergence of industrial automation with mining machinery has resulted in greatly increased efficiency and safety. Drill rigs, excavators and mobile hammering systems are complicated machines which must perform flawlessly under the harshest conditions. System failures are not only costly, but potentially harmful for operators. For these applications POSITAL IXARC rotary encoders can be used to provide precise positioning of drill heads and masts. Single and dual axis POSITAL TILTIX inclinometers further equip operators with essential information for platform leveling and arm positioning. Combined in CANopen and SAE J1939 networks, these devices can help automate and monitor highly complex tasks.

Cranes

Cranes and other material handling equipment are required to be safe, efficient and reliable. Positioning is of prime importance, and redundant systems are often used to eliminate errors. To address this requirement the IXARC SIL-2 encoders are an excellent fit, combining redundant measurement with an easy-to-integrate interface. For boom extensions and height measurements, LINARIX linear sensors are economical, compact and highly tolerant of condensation, shock and vibration.

Concrete Pumps

Concrete trucks have to feed fresh concrete to high-rise construction sites, often over large obstacles. These pathways have many joints and axes of rotation, making the task only more daunting. IXARC rotary encoders mounted directly on rotational joints provide data for active damping systems. The position of boom arms can also be monitored using TILTIX single-axis inclinometers, while dual-axis models are useful for base leveling. With IP69K ratings, IXARC encoders and TILITX inclinometers are built to withstand the high temperature, high pressure washdowns that are necessary to maintain these trucks.


APPLICATION EXAMPLES




Wind Energy

IXARC heavy duty absolute encoders provide precise angle measurements for pitch control systems that dynamically adjust the angle of the rotor blades. High resolution encoders are a great choice for positioning the nacelle with respect to wind direction.

Solar Energy

For both photovoltaic systems and solar thermal power plants (parabolic), solar tracking systems increase energy efficiency by optimizing the orientation of the solar collectors. Single-axis solar tracking systems typically follow the sun as it travels east to west across the sky, while two axis systems also adjust the elevation of the collectors. Compact and accurate IXARC encoders and TILTIX inclinometers are ideal for these tracking systems.

Dams and Canals

In hydroelectric dams, the precise positioning of flowgates is required to control the volume and speed of water. Simple analog control systems are often used for this task and IXARC encoders with analog interfaces provide the right mix of accuracy and compatibility.

Canal gates used in irrigation systems and lift-locks need to be precisely positioned in order to control the flow of water in the canals. Moreover, since thethese canals often extend over vast, remote areas, solar energy is sometimes used to power these control structures. IXARC absolute multiturn encoders are ideal for this application since they will retain a ‘memory of their position, even when powered down. IXARC rotary encoders and TILTIX inclinometers are available with IP68 and IP69K environmental ratings for use in harsh environments. Neither type of sensor requires batteries, minimizing maintenance and increasing reliability.

APPLICATION EXAMPLES

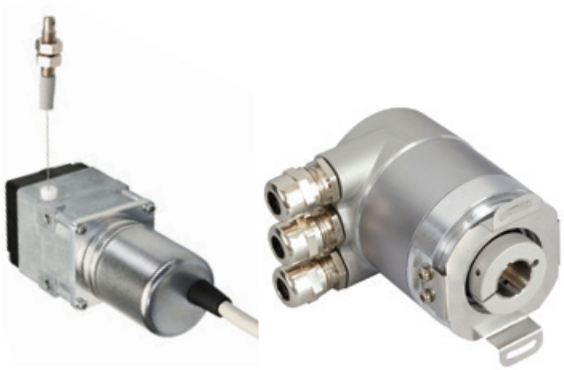

Packaging

Absolute rotary encoders are essential in packaging machines. High precision is needed in processes like form filling, sealing, palletizing, pick and place, cartoning and cardboard folding. In larger lines, IXARC rotary encoders with field bus interfaces simplify wiring and keep costs down.

Stainless steel IXARC rotary encoders not only provide precise positioning, but are also able to withstand the high temperature and pressure wash-downs. Since these devices retain knowledge of absolute postion during power outages, there is no need to re-home systems after power is restored.

Textile and Plastic

Textile and Plastic Manufacturing is highly process-driven with multiple stages. The material being manufactured can be changed periodically and constant adjustments need to be made in roll and nozzle positioning. IXARC absolute encoders and LINARIX linear sensors can help make these changes quickly, reducing downtime and increasing efficiency.

Food and Beverage

Bottling plants are becoming faster in response to growing global demands. Each bottle must be filled to the right level and labeled correctly. Manufactures have to comply with strict laws and hence need to pack and process these goods quickly under tight controls. IXARC encoders and LINARIX linear sensors help achieve this efficiency.

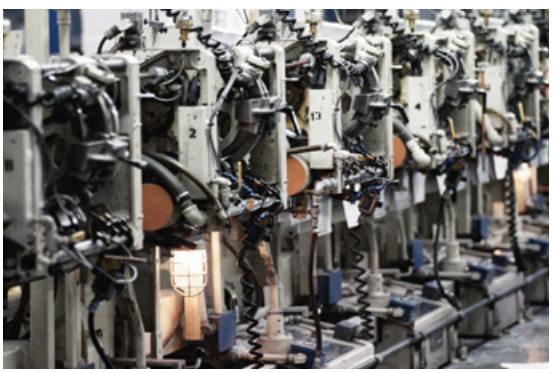

APPLICATION EXAMPLES

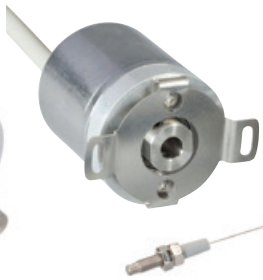

Scissor Lifts and Aerial Work Platforms

Scissor lifts needs constant tilt monitoring to prevent tip-overs. The height of the lift also needs to be known. TILTIX inclinometers and LINARIX linear sensors are perfect for such applications.

Forklifts and Automated Guided Vehicles

For forklifts and AGV's that carry loads from one point to another, safety is of utmost importance. Monitoring tilt and the height of the forks is important; TILTIX inclinometers and LINARIX linear sensors help achieve this.

Automated Storage Retrieval Systems

Increasing warehouse and labor costs make the use of automatic storage and retrieval systems economically attractive. IXARC absolute encoders and LINARIX linear sensors are used in these systems to give the position of the trays with respect to the vertical racks where goods are placed.

Overhead Conveyors

Assembly lines for automotive production have dedicated work stations for different processes. Typically the vehicle chassis is moved through a series of such work stations using overhead conveyors. IXARC absolute encoders help achieve this movement in a safe and controlled manner.

Baggage Handling

Due to stringent security requirements, all airline baggage needs to be screened and distributed in a secure manner. A labyrinth of conveyors helps sort these in a correct fashion. IXARC field bus encoders help track the position of multiple baggage conveyors. Simplified wiring, programmability and diagnostic LEDs reduce system installation time and cost.

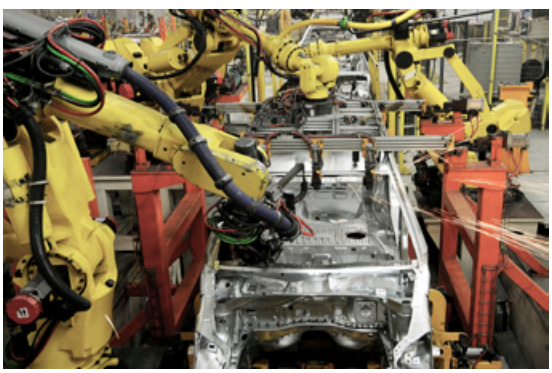

APPLICATION EXAMPLES

Healthcare

Modern devices used in the healthcare industry demand advanced technology for precise positioning. TILTIX compact inclinometers provide accurate measurements and are built to last the life of the equipment. LINARIX linear sensors offer a solution for tracking the position of patient tables. For more complex applications, such as fluoroscopy or radiography tables or surgical C-arms, that require coordinated positioning of several components, IXARC absolute rotary encoders are an excellent option.

Elevators

Elevator cars need to be accurately positioned with respect to each floor they visit. IXARC absolute encoders help provide this information without the need of a ground reference. With IXARC absolute encoders, knowledge of the position of the elevator car is alwoays retained, even during power failures. IXARC encoders supporting the CANopen Lift protocol help meet the high safety standards of this industry. Cost efficient LINARIX linear sensors provide door positioning.

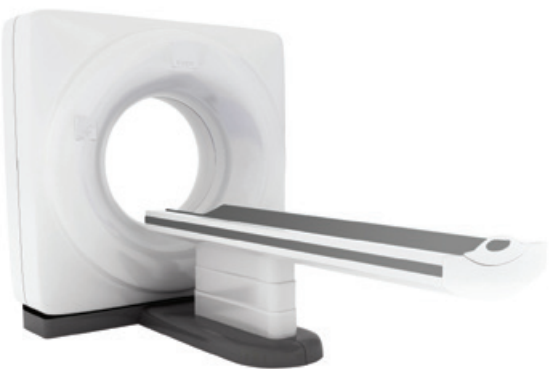

Sold & Serviced By:
SERVO2GO.com
Toll Free Phone: 877-378-0240
Toll Free Fax: 877-378-0249
sales@servo2go.com
www.servo2go.com

ABSOLUTE VS INCREMENTAL ENCODERS

Encoder Fundamentals

Positioning tasks require precise position values to monitor or control motion activity. In many applications position sensing is done using rotary encoders, also called shaft encoders or simply encoders. These sensors transform a mechanical angular position of a shaft or axle into an electronic signal that can be processed by a control system.

Absolute Rotary Encoders

Absolute rotary encoders are capable of providing unique position values from the moment they are switched on. This is accomplished by scanning the position of a coded element. All positions in these systems correspond to a unique code. Even movements that occur while the system is without power are translated into accurate position values once the encoder is powered up again.

Incremental Rotary Encoders

Incremental encoders generate an output signal each time the shaft rotates a certain amount. (The number of signals per turn defines the resolution of the device.) Each time the encoder is powered on it begins counting from zero, regardless of where the shaft is. Initial homing to a reference point is therefore inevitable in all positioning tasks, both upon start up of the control system and whenever power to the encoder has been interrupted.

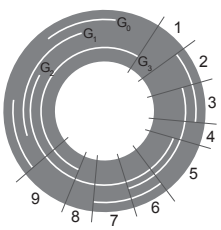

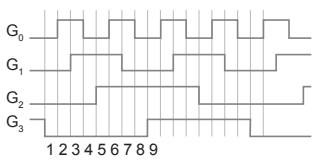

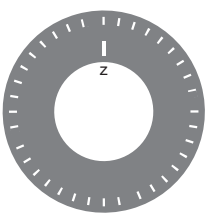

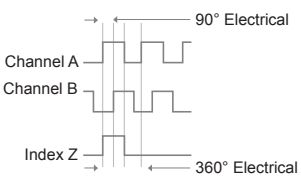

TECHNOLOGY IXARC ENCODERS

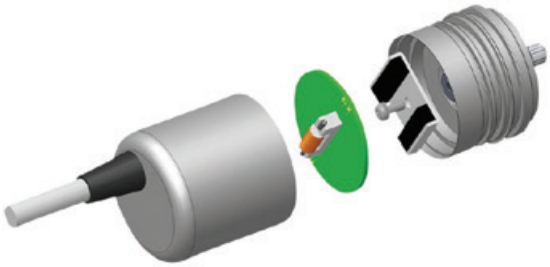

Magnetic Measurement Principles

Magnetic rotary encoders determine angular position using magnetic field sensor technology. A permanent magnet (a) fixed to the encoder's shaft creates a magnetic field (b) that is sampled by a sensor (c) that generates a unique absolute position reading.

Multiturn Innovation

POSITAL's IXARC multiturn magnetic rotary encoders use an innovative technology to keep track of the number of rotations that the encoder has experienced, even if the rotations occur when there is no system power. To accomplish this, the encoders generate electrical energy from the rotation of the encoder shaft. The technology is based on the 'Wiegand effect': when a permanent magnet (a) on the encoder shaft rotates through a certain angle, the magnetic polarity in a 'Wiegand wire' suddenly changes, inducing a brief voltage spike in a coil (d) surrounding the wire. This pulse both marks a rotation of the shaft and powers the electronic circuitry that records the event. The Wiegand effect occurs reliably even with very slow rotations and eliminates the need for backup batteries.

Advantages of Magnetic Encoders

Magnetic encoders are robust, durable and compact. Their battery and gearless construction makes them mechanically simple and economical as compared to optical encoders. Their compact dimensions mean that they can be used in applications with very limited installation space.

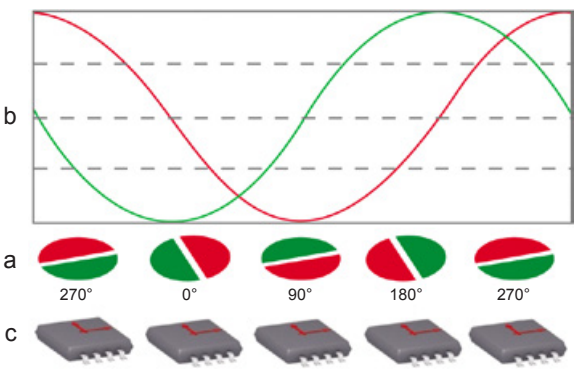

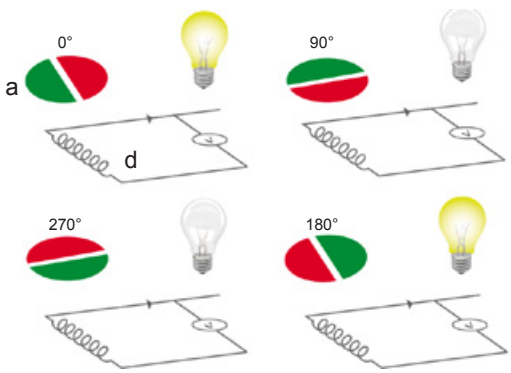

TECHNOLOGY IXARC ENCODERS

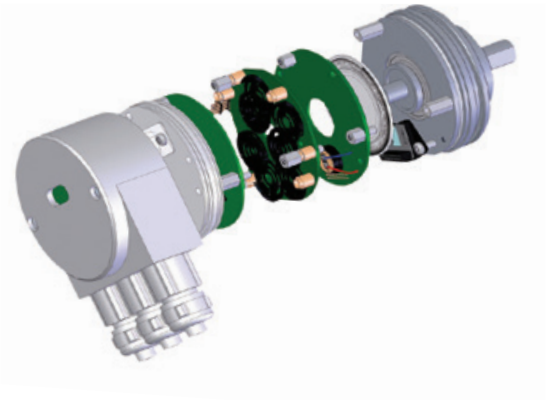

Optical Measuring Principles

A key component of optical rotary encoders is a code disk (a) mounted on the encoder shaft (b). This disk is made of a transparent material that has a concentric pattern of transparent and opaque areas. Infrared light from an LED (c) shines through the code disk, onto an array of photoreceptors (d). As the shaft turns, a unique combination of photoreceptors are illuminated or blocked from light by the pattern on the disk. For multiturn models, there is an additional set of code discs arranged in a gear train (e). As the main encoder shaft rotates, these discs are geared together to turn like the wheels of an odometer. The rotational position of each disc is monitored optically and the output is a count of the net number of rotations of the encoder shaft.

Functionality

POSITAL's IXARC optical absolute rotary encoders use highly integrated Opto-ASICs, providing a resolution up to 16 bits (65,536 steps) per turn. For multiturn models, the measuring range is extended by the mechanically geared code disks to as many as 16,384 (2^{14}) revolutions.

Advantages of Optical Encoders

Optical encoders provide very high resolution and accuracy along with excellent dynamic response and are suitable for use in areas with high magnetic fields. Since the rotation of the code discs is an entirely mechanical process, there is no risk of these devices losing track of their absolute position due to a temporary loss of instrument power. No backup batteries are required!

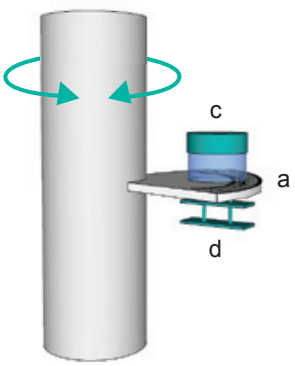

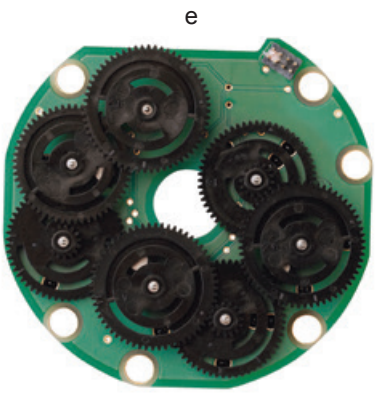

PRODUCT OVERVIEW IXARC ROTARY ENCODERS

IP68 – IP69K Encoders with Analog and SSI Interfaces




Highlights	Magnetic SSI, Ø 42 mm 300 N Shaft Load	Magnetic SSI, Ø 36 mm IP69K	Magnetic Analog, Ø 42 mm 300 N Shaft Load	Magnetic Analog, Ø 36 mm IP69K
Protection Class	IP69K	IP69K	IP69K	IP69K
Communication Interface	SSI	SSI	Analog Voltage, Current	Analog Voltage, Current
Technology	Magnetic	Magnetic	Magnetic	Magnetic
Revolutions (Turns)	Up to 65536	Up to 65536	Up to 32768	Up to 32768
Resolution	Up to 14 bit (0.022°)	Up to 14 bit (0.022°)	Total 12 bit (0.088°)	Total 12 bit (0.088°)
Accuracy / Linearity	±0.35°	±0.35°	±0.35° / 0.05 %	±0.35° / 0.05 %
Flange Size in mm [in]	Ø 42 [1.65]	Ø 36 [1.42]	Ø 42 [1.65]	Ø 36 [1.42]
Flange Design	Synchro	Synchro	Synchro	Synchro
Shaft Diameters in mm [in]	Ø 10 [0.39]	Ø 10 [0.39]	Ø 10 [0.39]	Ø 10 [0.39]
Material Flange / Housing	Stainless Steel (V2A) / Stainless Steel (V2A)	Aluminum / Steel	Stainless Steel (V2A) / Stainless Steel (V2A)	Aluminum / Steel
RPM / Radial Shaft Load in N	Max. 6000 / 300	Max. 6000 / 180	Max. 6000 / 300	Max. 6000 / 180
Shock / Vibration[1)]	300 g / 30 g	300 g / 30 g	300 g / 30 g	300 g / 30 g
Temperature in°C [°F] / Humidity	-40 to +85 [-40 to +185] / 98 %	-40 to +85 [-40 to +185] / 98 %	-40 to +85 [-40 to +185] / 98 %	-40 to +85 [-40 to +185] / 98 %
Connection Type	Connector / Cable Gland	Connector / Cable Gland	Connector / Cable Gland	Connector / Cable Gland
Supply Voltage	4.5 to 30 V	4.5 to 30 V	12 to 30 V	12 to 30 V
Certificate	UL, CE	UL, CE	UL, CE	UL, CE
Type Key	MCD-S..-G10G-...	MCD-S..-D10D-...	MCD-A..-G10G-...	MCD-A..-D10D-...

1) Based on (EN 60068-2-27) / (EN 60068-2-6)

Please refer to the product finder on our website for all possible combinations.

PRODUCT OVERVIEW IXARC ROTARY ENCODERS

IP68 – IP69K Encoders with Bus Interfaces



Highlights	Magnetic Bus Interfaces, Ø 36 mm IP69K	Optical Bus Interfaces Up to 16 bit	Magnetic Bus Interfaces, Ø 42 mm 300 N Shaft Load
Protection Class	IP69K	IP68	IP69K
Communication Interface	DeviceNet, CANopen, CANopen Lift, SAE J1939	DeviceNet, CANopen, CANopen Lift, SAE J1939	DeviceNet, CANopen, CANopen Lift, SAE J1939
Technology	Magnetic	Optical	Magnetic
Revolutions (Turns)	Up to 65536	Up to 16384	Up to 65536
Resolution	Up to 14 bit (0.022°)	Up to 16 bit (0.005°)	Up to 14 bit (0.022°)
Accuracy	±0.35°	±0.022°	±0.35°
Flange Size in mm [in]	Ø 36 [1.42]	Ø 58 [2.28]	Ø 42 [1.65]
Flange Design	Synchro	Synchro, Clamp, Blind Hollow	Synchro
Shaft Diameters in mm [in]	Ø 10 [0.39]	Shaft Ø 10 [0.39] Hub Ø 6 to 15 [0.24 to 0.59]	Ø 10 [0.39]
Material Flange / Housing	Aluminum / Steel	Aluminum / Aluminum	Stainless Steel (V2A) / Stainless Steel (V2A)
RPM / Radial Shaft Load in N	Max. 6000 / 180	Max. 6000 / 110	Max. 6000 / 300
Shock / Vibration[1)]	300 g / 30 g	100 g / 10 g	300 g / 30 g
Temperature in °C [°F] / Humidity	-40 to +85 [-40 to +185] / 98 %	-40 to +85 [-40 to +185] / 98 %	-40 to +85 [-40 to +185] / 98 %
Connection Type	Connector / Cable Gland	Connector / Cable Gland	Connector / Cable Gland
Supply Voltage	4.5 to 30 V	4.5 to 30 V	4.5 to 30 V
Certificate	UL, CE	UL, CE	UL, CE
Type Key	MCD-C/D..-D10D-...	OCD-C/D..-...	MCD-C/D..-…H-...

1) Based on (EN 60068-2-27) / (EN 60068-2-6)

Please refer to the product finder on our website for all possible combinations.

PRODUCT OVERVIEW IXARC ROTARY ENCODERS

Encoders with Analog, SSI, Bit Parallel and Incremental Interfaces





Highlights	Optical SSI Up to 16 bit	Optical SSI + Incremental Up to 16 bit	Magnetic SSI Ø 36 mm	Optical Parallel Output Up to 16 bit	Magnetic Programmable Analog
Protection Class	Up to IP67	Up to IP67	Up to IP65	Up to IP67	Up to IP65
Communication Interface	SSI	SSI + Incremental	SSI	Parallel	Analog Voltage, Current
Technology	Optical	Optical	Magnetic	Optical	Magnetic
Revolutions (Turns)	Up to 16384	Up to 16384	Up to 65536	Up to 16384	Up to 32768
Resolution	Up to 16 bit (0.005°)	Up to 16 bit (0.005°)	Up to 14 bit (0.022°)	Up to 16 bit (0.005°)	Total 12 bits (0.088°)
Accuracy / Linearity	±0.022°	±0.022°	±0.35°	±0.022°	±0.35° / 0.05 %
Flange Size in mm [in]	Ø 58 [2.28]	Ø 58 [2.28]	Ø 36 [1.42] Ø 58 [2.28]	Ø 58 [2.28]	Ø 36 [1.42] Ø 58 [2.28]
Flange Design	All	All	All	All	All
Shaft Diameters in mm [in]	Ø 6 to 15 [0.24 to 0.59]	Ø 6 to 15 [0.24 to 0.59]	Ø 6 to 15 [0.24 to 0.59]	Ø 6 to 15 [0.24 to 0.59]	Ø 6 to 15 [0.24 to 0.59]
Material Flange / Housing	Aluminum or Stainless Steel / Steel	Aluminum or Stainless Steel / Steel	Aluminum / Steel	Aluminum or Stainless Steel / Steel	Aluminum / Steel
RPM / Radial Shaft Load in N	Max. 12000 / 110	Max. 12000 / 110	Max. 12000 / 110	Max. 12000 / 110	Max. 12000 / 110
Shock / Vibration[1)]	100 g / 10 g	100 g / 10 g	100 g / 10 g	100 g / 10 g	100 g / 10 g
Temperature in °C [°F] / Humidity	-40 to +85 [-40 to +185] / 98 %	-40 to +85 [-40 to +185] / 98 %	-40 to +85 [-40 to +185] / 98 %	-40 to +85 [-40 to +185] / 98 %	-40 to +85 [-40 to +185] / 98 %
Connection Type	Connector / Cable Gland	Connector / Cable Gland	Connector / Cable Gland	Connector / Cable Gland	Connector / Cable Gland
Supply Voltage	4.5 to 30 V	4.5 to 30 V	4.5 to 30 V	4.5 to 30 V	12 to 30 V
Certificate	UL, CE	UL, CE	UL, CE	UL, CE	UL, CE
Type Key	OCD-..	OCD-..	MCD-..	OCD-..	MCD-..

1) Based on (EN 60068-2-27) / (EN 60068-2-6)

Please refer to the product finder on our website for all possible combinations.

PRODUCT OVERVIEW IXARC ROTARY ENCODERS

Encoders with Bus Interfaces





Highlights	Optical PROFIBUS Up to 16 bit	Optical Bus Interfaces Up to 16 bit	Magnetic Bus Interfaces Ø 58 mm	Optical DeviceNet Up to 16 bit	Magnetic DeviceNet Ø 36 mm
Protection Class	Up to IP67	Up to IP67	Up to IP65	Up to IP67	Up to IP65
Communication Interface	PROFIBUS DPV0 / DPV1 / DPV2	CANopen, CANopen Lift	CANopen, CANopen Lift	DeviceNet	DeviceNet
Technology	Optical	Optical	Magnetic	Optical	Magnetic
Revolutions (Turns)	Up to 16384	Up to 16384	Up to 65536	Up to 16384	Up to 65536
Resolution	Up to 16 bit (0.005°)	Up to 16 bit (0.005°)	Up to 14 bit (0.022°)	Up to 16 bit (0.005°)	Up to 14 bit (0.022°)
Accuracy	±0.022°	±0.022°	±0.35°	±0.022°	±0.35°
Flange Size in mm [in]	Ø 58 [2.28]	Ø 58 [2.28]	Ø 58 [2.28]	Ø 58 [2.28]	Ø 36 [1.42] Ø 58 [2.28]
Flange Design	Clamp, Synchro, Blind Hollow	All	Clamp, Synchro, Blind Hollow	All	Clamp, Synchro, Blind Hollow
Shaft Diameters in mm [in]	Ø 6 to 15 [0.24 to 0.59]	Ø 6 to 15 [0.24 to 0.59]	Ø 6 to 15 [0.24 to 0.59]	Ø 6 to 15 [0.24 to 0.59]	Ø 6 to 15 [0.24 to 0.59]
Material Flange / Housing	Aluminum or Stainless Steel / Steel	Aluminum or Stainless Steel / Steel	Aluminum / Steel	Aluminum or Stainless Steel / Steel	Aluminum / Steel
RPM / Radial Shaft Load in N	Max. 12000 / 110	Max. 12000 / 110	Max. 12000 / 110	Max. 12000 / 110	Max. 12000 / 110
Shock / Vibration[1)]	100 g / 10 g	100 g / 10 g	100 g / 10 g	100 g / 10 g	100 g / 10 g
Temperature in °C [°F] / Humidity	-40 to +85 [-40 to +185] / 98 %	-40 to +85 [-40 to +185] / 98 %	-40 to +85 [-40 to +185] / 98 %	-40 to +85 [-40 to +185] / 98 %	-40 to +85 [-40 to +185] / 98 %
Connection Type	Connector / Connection Cap	Connector / Connection Cap	Connector / Connection Cap	Connector / Connection Cap	Connector / Connection Cap
Supply Voltage	10 to 30 V	10 to 30 V	10 to 30 V	10 to 30 V	10 to 30 V
Certificate	UL, CE	UL, CE	UL, CE	UL, CE	UL, CE
Type Key	OCD-..	OCD-..	MCD-..	OCD-..	MCD-..

1) Based on (EN 60068-2-27) / (EN 60068-2-6)

Please refer to the product finder on our website for all possible combinations.

PRODUCT OVERVIEW IXARC ROTARY ENCODERS

Encoders with Ethernet Interfaces

Highlights	Optical Ethernet/IP Up to 16 bit	Optical PROFINET Up to 16 bit	Optical Modbus/TCP Up to 16 bit	Optical POWERLINK Up to 16 bit	Optical EtherCAT Up to 16 bit
Protection Class	Up to IP67	Up to IP67	Up to IP67	Up to IP67	Up to IP67
Communication Interface	EtherNet/IP	PROFINET	Modbus/TCP	ETHERNET POWERLINK	EtherCAT
Technology	Optical	Optical	Optical	Optical	Optical
Revolutions (Turns)	Up to 16384	Up to 16384	Up to 16384	Up to 16384	Up to 16384
Resolution	Up to 16 bit (0.005°)	Up to 16 bit (0.005°)	Up to 16 bit (0.005°)	Up to 16 bit (0.005°)	Up to 16 bit (0.005°)
Accuracy	±0.022°	±0.022°	±0.022°	±0.022°	±0.022°
Flange Size in mm [in]	Ø 58 [2.28]	Ø 58 [2.28]	Ø 58 [2.28]	Ø 58 [2.28]	Ø 58 [2.28]
Flange Design	Clamp, Synchro, Blind Hollow	Clamp, Synchro, Blind Hollow	Clamp, Synchro, Blind Hollow	Clamp, Synchro, Blind Hollow	Clamp, Synchro, Blind Hollow
Shaft Diameters in mm [in]	Ø 6 to 15 [0.24 to 0.59]	Ø 6 to 15 [0.24 to 0.59]	Ø 6 to 15 [0.24 to 0.59]	Ø 6 to 15 [0.24 to 0.59]	Ø 6 to 15 [0.24 to 0.59]
Material Flange / Housing	Aluminum or Stainless Steel / Steel	Aluminum or Stainless Steel / Steel	Aluminum or Stainless Steel / Steel	Aluminum or Stainless Steel / Steel	Aluminum or Stainless Steel / Steel
RPM / Radial Shaft Load in N	Max. 12000 / 110	Max. 12000 / 110	Max. 12000 / 110	Max. 12000 / 110	Max. 12000 / 110
Shock / Vibration[1)]	100 g / 10 g	100 g / 10 g	100 g / 10 g	100 g / 10 g	100 g / 10 g
Temperature in °C [°F] / Humidity	-40 to +85 [-40 to +185] / 98 %	-40 to +85 [-40 to +185] / 98 %	-40 to +85 [-40 to +185] / 98 %	-40 to +85 [-40 to +185] / 98 %	-40 to +85 [-40 to +185] / 98 %
Connection Type	Connector	Connector	Connector	Connector	Connector
Supply Voltage	10 to 30 V	10 to 30 V	10 to 30 V	10 to 30 V	10 to 30 V
Certificate	UL, CE	UL, CE	UL, CE	UL, CE	UL, CE
Type Key	OCD-..	OCD-..	OCD-..	OCD-..	OCD-..

1) Based on (EN 60068-2-27) / (EN 60068-2-6)

Please refer to the product finder on our website for all possible combinations.

PRODUCT OVERVIEW IXARC ROTARY ENCODERS

Explosion Proof and Safety-Certified Encoders





Highlights	ATEX Certified Bus Encoder	ATEX Certified SSI Encoder	ATEX Certified Ethernet Encoder	SIL Certified Magnetic Encoder	SIL CL 3 Certified Precise Encoder
Protection Class	Up to IP67	Up to IP67	Up to IP67	Up to IP67	Up to IP67
Communication Interface	PROFIBUS, CANopen, DeviceNet	SSI	EtherNet/IP, PROFINET, Modbus/TCP	CANSafe (EN50325-5)	CANSafe (EN50325-5)
Technology	Optical	Optical	Optical	Magnetic	Optical
Revolutions (Turns)	Up to 16384	Up to 16384	Up to 16384	Singleturn	Up to 16384
Resolution	Up to 16 bit (0.005°)	Up to 16 bit (0.005°)	Up to 16 bit (0.005°)	Up to 14 bit (0.005°)	Up to 16 bit (0.005°)
Accuracy	±0.022°	±0.022°	±0.022°	±1.8° (safe)	±0.35° (safe)
Flange Size in mm [in]	Ø 78 [3.07]	Ø 78 [3.07]	Ø 78 [3.07]	Ø 25 [0.98] Ø 9 [0.35]	Ø 58 [2.28]
Flange Design	Clamp, Blind Hollow, Synchro	Clamp, Blind Hollow, Synchro	Clamp, Blind Hollow, Synchro	Synchro	Clamp, Blind Hollow, Synchro
Shaft Diameters in mm [in]	Shaft Ø 10 [0.39] / Hub Ø 14 [0.55]	Shaft Ø 10 [0.39] / Hub Ø 14 [0.55]	Shaft Ø 10 [0.39] / Hub Ø 14 [0.55]	Ø 6 [0.24] Ø 10 [0.39]	Ø 6 to 15 [0.24 to 0.59]
Material Flange / Housing	Aluminum or Stainless Steel	Aluminum or Stainless Steel	Aluminum or Stainless Steel	Aluminum / Steel	Aluminum / Steel
RPM / Radial Shaft Load in N	Max. 3000 / 50	Max. 3000 / 50	Max. 3000 / 50	Application Dependent	Max. 6000 / 110
Shock / Vibration[1)]	100 g / 10 g	100 g / 10 g	100 g / 10 g	100 g / 10 g	100 g / 10 g
Temperature in °C [°F] / Humidity	-40 to +75 [-40 to +167] / 98 %	-40 to +75 [-40 to +167] / 98 %	-40 to +75 [-40 to +167] / 98 %	-40 to +75 [-40 to +167] / 98 %	-30 to +70 [-22 to +158] / 98 %
Connection Type	Connection Cap with Cable Gland	Connection Cap with Cable Gland	Cable	Cable	Connector / Connection Cap
Supply Voltage	10 to 30 V	4.5 to 30 V	10 to 30 V	9 to 35 V	12 to 30 V
Certificate	ATEX / IECEx	ATEX / IECEx	ATEX / IECEx	SIL CL 2 and Pl d	SIL CL 3 and Pl e
Type Key	OCE/M-	OCE/M-	OCE/M-	MCS-	OCS-

1) Based on (EN 60068-2-27) / (EN 60068-2-6)

Please refer to the product finder on our website for all possible combinations.

PRODUCT SELECTION GUIDE IXARC ROTARY ENCODERS

IXARC Magnetic Encoders

	1			2						3			4			5			6			7		
M	C		–						–						–						–			

1 Certificate

D	CE/UL
S	SIL

2 Communication Interface

AV001	Voltage: 0 to 5 V
AVP01	Voltage: 0 to 5 V w. Pushbuttons
AV002	Voltage: 0 to 10 V
AVP02	Voltage: 0 to 10 V w. Pushbuttons
AV003	Voltage: 0.5 to 4.5 V
AVP03	Voltage: 0.5 to 4.5 V w. Pushbuttons
AV004	Voltage: 0.5 to 9.5 V
AVP04	Voltage: 0.5 to 9.5 V w. Pushbuttons
AC005	Current: 4 to 20 mA
ACP05	Current: 4 to 20 mA w. Pushbuttons
AC006	Current: 0 to 20 mA
ACP06	Current: 0 to 20 mA w. Pushbuttons
CA00B	CANopen
CL00B	CANopen Lift
D200B	DeviceNet
C900B	J1939
S101B	SSI Binary
S101G	SSI Gray

3 Revolution

00	Singleturn
04	Multiturn: 4 bit (16 rev)
08	Multiturn: 8 bit (256 rev)
12	Multiturn: 12 bit (4096 rev)
13	Multiturn: 13 bit (8192 rev)
14	Multiturn: 14 bit (16384 rev)
16	Multiturn: 16 bit (65536 rev)

4 Resolution

10	10 bit (1024 Steps / 0.35°)
12	12 bit (4096 Steps / 0.088°)

5 Mechanical Design

See next page for details

6 Protection Class

A	IP54
0	IP54 to IP65
S	IP54 to IP67 (Only Clamping Flange)
D	IP54 to IP69K
G	IP54 to IP69K (Stainless Steel)

7 Connection Type

CAW	Cable: Axial 1 m
2AW	Cable: Axial 2 m
5AW	Cable: Axial 5 m
AAW	Cable: Axial 10 m
CRW	Cable: Radial 1 m
2RW	Cable: Radial 2 m
5RW	Cable: Radial 5 m
ARW	Cable: Radial 10 m
PAM	Connector: Axial M12 (5 pin)
PAQ	Connector: Axial M12 (8 pin)
PRM	Connector: Radial M12 (5 pin)
PRQ	Connector: Radial M12 (8 pin)

Please refer to the product finder on our website for all possible combinations.

PRODUCT SELECTION GUIDE IXARC ROTARY ENCODERS

Mechanical Design 5 and Connection Type 7

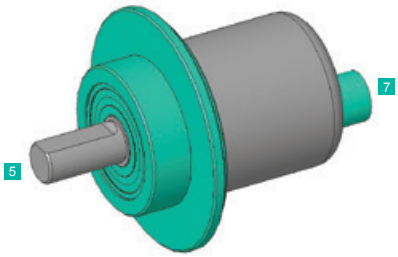

5 Synchro Flange (R) — Ø 36

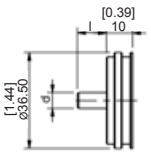

Type	d	l	Housing
R06	6	10	Type 1
R10	10	12	Type 1

5 Clamp Flange (L) — Ø 58

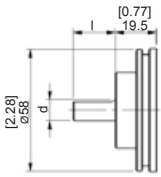

Type	d	l	Housing
L06	6	10	Type 3
L10	10	20	Type 3
L12	12	20	Type 3

5 Clamp Flange (M) — Ø 58

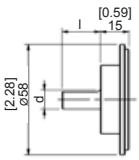

Type	d	l	Housing
M06	6	10	Type 1
M10	10	20	Type 1
M12	12	20	Type 1

5 Synchro Flange (Y) — Ø 58

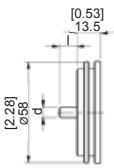

Type	d	l	Housing
Y06	6	10	Type 3
Y10	10	20	Type 3
Y12	12	20	Type 3

5 Blind Hollow Flange (V) — Ø 36 / Ø 42

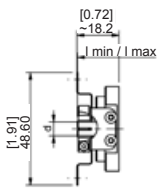

Type	d	$l_{min/max}$	Housing
V06	6	12/18	Type 1
V08	8	12/18	Type 1
V10	10	12/18	Type 1
V12	12	12/18	Type 1

5 Blind Hollow Flange (H) — Ø 58

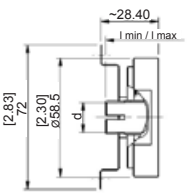

Type	d	$l_{min/max}$	Housing
H06	6	15/30	Type 3
H08	8	15/30	Type 3
H12	12	15/30	Type 3
H14	14	15/30	Type 3
H15	15	15/30	Type 3

5 Blind Hollow Flange (A06) — Ø 36

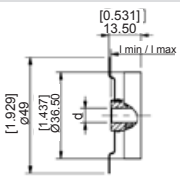

Type	d	$l_{min/max}$	Housing
A06	6	11/14	Type 1

7 Housing Type 1 — Ø 36

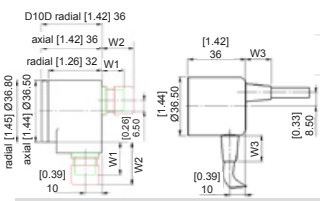

Type	W1	W2	W3
_ AW	~20	~26	~16
P_ _	~25	~13	~16

5 Synchro HD Flange (D10D) — Ø 36

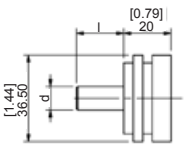

Type	d	l	Housing
D10D	10	20	Type 2

7 Housing Type 2 — Ø 42

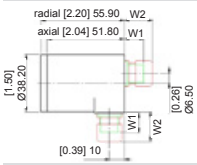

Type	W1	W2
_ _W	~25	~13
P_ _	~20	~14

5 Synchro Stainless Steel Flange (G10G) — Ø 42

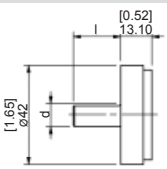

Type	d	l	Housing
G10G	10	20	See Product Finder

7 Housing Type 3 — Ø 58

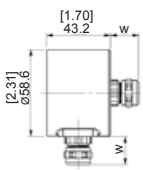

Type	W
_ _W	20
P_ _	13

All measurement in mm [in]

PRODUCT SELECTION GUIDE IXARC ROTARY ENCODERS

IXARC Optical Encoders

	1			2						3			4			5			6			7		
O	C		–						–						–						–			

1 Certificate

D	CE/UL
E	Ex Oil / Gas
M	Ex Mining
S	SIL

4 Resolution

12	12 bit (4096 Steps / 0.088°)
13	13 bit (8192 Steps / 0.044°)
16	16 bit (65536 Steps / 0.005°)

2 Communication Interface

PPA1B	Parallel Binary
PPA1G	Parallel Gray
P1A1B	Parallel Preset Binary
P1A1G	Parallel Preset Gray
S101B	SSI Binary
S101G	SSI Gray
S401B	SSI Binary w. Pushbuttons
S401G	SSI Gray w. Pushbuttons
S5xxB	SSI+Incremental binary + A/B/Z (RS-422)
S6xxB	SSI+Incremental binary + A/B/Z (Push-Pull)
S5xxG	SSI+Incremental Gray + A/B/Z (RS-422)
S6xxG	SSI+Incremental Gray + A/B/Z (Push-Pull)
DPC1B	Profibus DP
CAA1B	CANopen
CL00B	CANopen Lift
D2B1B	DeviceNet
IBA1B	Interbus
EIB1B	PROFINET IO
EEA1B	EtherNet/IP
E2A2B	POWERLINK
EC00B	EtherCAT
EM00B	Modbus/TCP

3 Revolution

00	Singleturn
08	Multiturn: 8 bit (256 rev)
12	Multiturn: 12 bit (4096 rev)
13	Multiturn: 13 bit (8192 rev)
14	Multiturn: 14 bit (16384 rev)

5 Mechanical Design

See next page for details

6 Protection Class

0	IP54 to IP65
S	IP54 to IP67 (with Shaft Sealing)
V	IP54 to IP67 (Stainless Steel)
H	IP54 to IP67 (Heavy Duty Design)

7 Connection Type

CAW	Cable: Axial 1 m
2AW	Cable: Axial 2 m
5AW	Cable: Axial 5 m
AAW	Cable: Axial 10 m
CRW	Cable: Radial 1 m
2RW	Cable: Radial 2 m
5RW	Cable: Radial 5 m
ARW	Cable: Radial 10 m
PAM	Connector: Axial M12, 5 pin
PAQ	Connector: Axial M12, 8 pin
PAL	Connector: Axial M23, 12 pin (SSI)
PAP	Connector: Axial M23, 16 pin (Parallel)
PAT	Connector: Axial M27, 26 pin (Parallel)
PRM	Connector: Radial M12, 5 pin (CAN, Analog)
PRQ	Connector: Radial M12, 8 pin (SSI)
PRL	Connector: Radial M23, 12 pin (SSI)
PRP	Connector: Radial M23, 16 pin (Parallel)
PRT	Connector: Radial M27, 26 pin (Parallel)
PRM	Connector: Radial 2 x M12 (Modbus)
PRM	Connector: Radial 3 x M12 (Ethernet/IP, Profinet, Powerlink, EtherCat)
PRI	Connector: Radial 2 x M23, 9 pin (Interbus)
H3P	Connection Cap: 3 Cable Glands
H2M	Connection Cap: 2 x M20 Cable Glands (Profibus, CAN, DeviceNet)
H72	Connection Cap: 3 x M12 Connectors (Profibus, CAN, DeviceNet)
H2B	Connection Cap: 2 x M12 Connectors (CAN, DeviceNet)
H1B	Connection Cap: 1 x M12 Connector (CAN, DeviceNet)
H1C	Connection Cap: 1 x M23 Connector (DeviceNet)
HCC	Connection Cap: Without
HFZ	Connection Cap: 2 x Radial Blind Plug (for OCE / OCM)
HFE	Connection Cap: 3 x Radial Blind Plug (for OCE / OCM)
HFG	Connection Cap: Axial Blind Plug (for OCE / OCM)

Please refer to the product finder on our website for all possible combinations.

PRODUCT SELECTION GUIDE IXARC ROTARY ENCODERS

Mechanical Design 5 and Connection Type 7

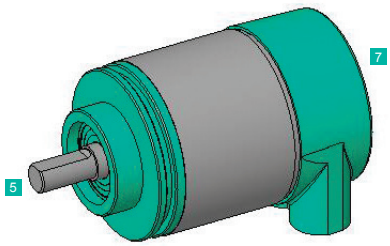

5 Through Hollow Flange (T) — Ø 58

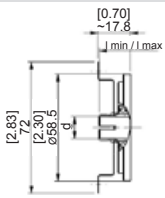

Type	d
T08	8
T10	10
T12	12

5 Clamp Flange (C) — Ø 58

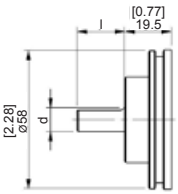

Type	d	l
C06	6	10
C10	10	20[1]
C12	12	20
CA7	9.5	20

5 Square Flange (9) — Ø 58

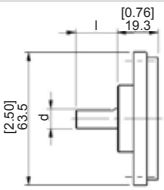

Type	d	l
9A7	9.5	20

5 Synchro Flange (S) — Ø 58

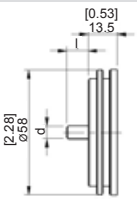

Type	d	l
S06	6	10[1]
S10	10	20[1]
S12	12	20

5 Blind Hollow Flange (B) — Ø 58

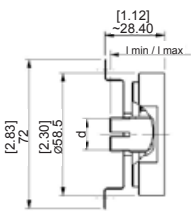

Type	d	$l_{min/max}$
B06	06	15 / 30
B08	08	15 / 30
B10	10	15 / 30
B12	12	15 / 30[1]
B14	14	15 / 30
B15	15	15 / 30

7 Housing for Fieldbus and Ethernet — Ø 58

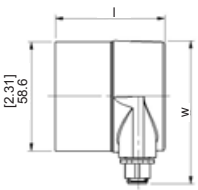

Type	W	L (ST / MT)[2]
PRM	70	57.5 / 68.5
		67.7 / 78.7[3]
H _ _	90	57.5 / 68.5
H2M		60.7 / 71.7

7 Axial Housings (Cable or Connector) — Ø 58

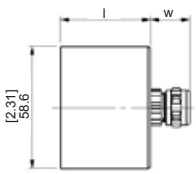

Type	W	L (ST / MT)[2]
_ AW	18	32.2 / 43.2
PA _	24	32.2 / 43.2

7 Radial Housings (Cable or Connector) — Ø 58

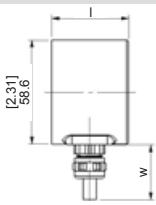

Type	W	L (ST / MT)[2]
_ RW	19	43.2 / 43.2
		43.2 / 53.0[4]
PR _	24	43.2 / 43.2
		43.2 / 53.0[4]

5 Clamp Flange (F10)[5] — Ø 78, EX-Proof

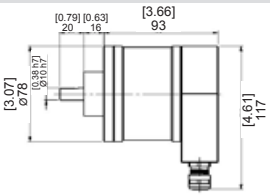

5 Blind Hollow Flange (E14)[5] — Ø 78, EX-Proof

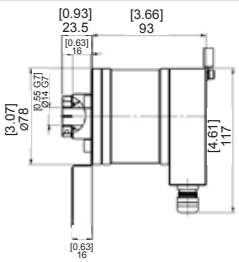

All measurement in mm [in]

1) SIL Certified
2) ST Singleturn, MT Multiturn
3) Modbus/TCP
4) Parallel
5) Available for OCE/M Types

TECHNOLOGY LINARIX LINEAR SENSORS

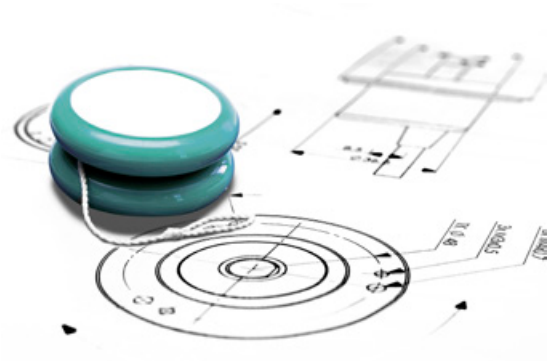

Repeatable Length Measurement

POSITAL's LINARIX draw wire sensors measure linear motion by displacing a retractable steel wire (a) wound around a cable drum (b) that actuates the rotary encoder (c) coupled to it. The encoder in return provides a proportional output. Measurements are highly accurate, reliable and the systems have very long lifetimes. The LINARIX line offers a wide range of measurement lengths ranging from 1 m to 10 m (3' to 33') and also provides position output in almost all available industrial interfaces both analog and digital.

Compared to conventional linear pots and linear measurement systems using multiple gears and encoders, the LINARIX line of sensors are more durable and can directly replace them, additionally, avoiding the common problems of slippage, wear and tear damage. The draw wire sensors from POSITAL provide extremely precise measurements because of the inherent accuracy of the encoders and the rugged construction ensures reliable performance even under extreme conditions.

The POSITAL product offering has been categorized based on robustness and length giving the customer maximum selectability based on their respective application.

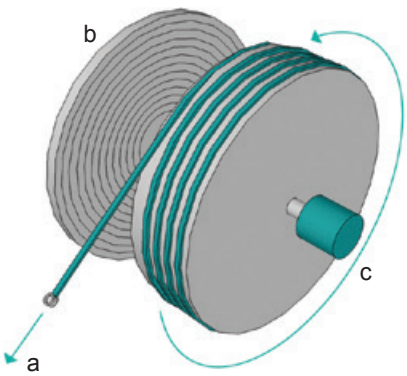

PRODUCT OVERVIEW LINARIX LINEAR SENSORS

Draw Wire Encoders with Machined Metal Housing




Measuring Range in m [in]	1.25 [49]	1.74 [69]	2.00 [79]	3.00 [118]
Communication Interface[1)]	Analog, SSI, CANopen, DeviceNet	Analog, SSI, CANopen, DeviceNet	Analog, SSI, CANopen, DeviceNet	Analog, SSI, CANopen, DeviceNet
Accuracy in [±FSO%]	0.04	0.02	0.02	0.04
Wire Material	Nylon Coated Stainless Steel	Coated Polyamide Stainless Steel	Plastic Coated Stainless Steel	Nylon Coated Stainless Steel
Wire Diameter in mm	Ø 0.48	Ø 0.45	Ø 0.45	Ø 0.48
Draw Wire Housing Material	Machined Metal, Rectangualar Housing	Machined Metal, Cylindrical Housing	Machined Metal, Rectangualar Housing	Machined Metal, Rectangualar Housing
Operating Temperature in °C [°F]	-40 to +94 [-40 to 201]	-20 to +80 [-4 to 176]	-10 to +80 [14 to 176]	-40 to +94 [-40 to 201]
Max. Extension Force in N	2.34	5.00	2	3.90
Min. Retraction Force in N	1.26	3.50	1.2	2.10
Linear Resolution[2)] in µm	24	36	24	49
Drum Circumference in mm [in]	Ø 100 [3.9]	Ø 149 [5.9]	Ø 100 [3.9]	Ø 200 [7.9]
Type Key	L..-..A-.C..	L..-..P-.C..	L..-..C-.N..	L..-..B-.C..

1) Other interfaces available on request
2) Based on an encoder with 12 Bit Resolution

Please refer to the product finder on our website for all possible combinations.

PRODUCT OVERVIEW LINARIX LINEAR SENSORS

Draw Wire Encoders with Machined Metal Housing or Die Cast Metal Housing




Measuring Range in m [in]	3.00 [118]	6.00 [236]	5.08 [200]	10.16 [400]
Communication Interface[1)]	Analog, SSI, CANopen, DeviceNet	Analog, SSI, CANopen, DeviceNet	Analog, SSI, CANopen, DeviceNet	Analog, SSI, CANopen, DeviceNet
Accuracy in [±FSO%]	0.01	0.01	0.02	0.02
Wire Material	Plastic Coated Stainless Steel	Stainless Steel	Nylon Coated Stainless Steel	Nylon Coated Stainless Steel
Wire Diameter in mm	Ø 0.87	Ø 0.54	Ø 0.86	Ø 0.86
Draw wire Housing Material	Machined Metal, Rectangualar Housing	Machined Metal, Rectangualar Housing	Die Cast Metal	Die Cast Metal
Temperature in °C [°F]	-40 to +80 [-40 to 176]	-20 to +80 [-4 to 176]	-40 to +90 [-40 to 194]	-40 to +90 [-40 to 194]
Max. Extension Force in N	3	8	6.5	6.5
Min. Retraction Force in N	2.5	3.0	3.5	3.5
Linear Resolution[2)] in µm	49	40	78	78
Drum Circumference in mm [in]	Ø 200 [7.9]	Ø 200 [7.9]	Ø 320 [12.6]	Ø 320 [12.6]
Type Key	L..-..D-.N..	L..-..E-.N..	L..-..K-.H.	L..-..L-.H..

1) Other interfaces available on request
2) Based on an encoder with 12 Bit Resolution

Please refer to the product finder on our website for all possible combinations.

Sold & Serviced By:
SERVO2GO.com
Toll Free Phone: 877-378-0240
Toll Free Fax: 877-378-0249
sales@servo2go.com
www.servo2go.com

PRODUCT OVERVIEW LINARIX LINEAR SENSORS

Draw Wire Encoders with Extruded Metal Housing or Plastic Housing

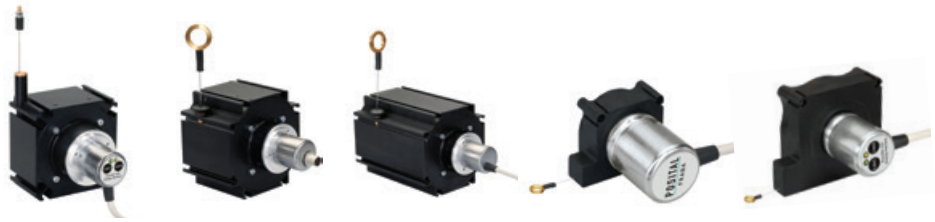

Measuring Range in m [in]	3.00 [118]	5.00 [197]	10.00 [394]	1.25 [49]	2.10 [83]
Communication Interface[1)]	Analog, SSI, CANopen, DeviceNet	Analog, SSI, CANopen, DeviceNet	Analog, SSI, CANopen, DeviceNet	Analog, SSI, CANopen, DeviceNet	Analog, SSI, CANopen, DeviceNet
Accuracy in [±FSO%]	0.02	0.02	0.01	0.05	0.05
Wire Material	Coated Polyamide Stainless Steel	Nylon Coated Stainless Steel	Nylon Coated Stainless Steel	Coated Polyamide Stainless Steel	Coated Polyamide Stainless Steel
Wire Diameter in mm	Ø 0.80	Ø 1.00	Ø 1.00	Ø 0.36	Ø 0.45
Draw wire Housing Material	Extruded Metal	Extruded Metal	Extruded Metal	Plastic	Plastic
Temperature in °C [°F]	-20 to +80 [-4 to 176]	-20 to +80 [-4 to 176]	-20 to +80 [-4 to 176]	-20 to +80 [-4 to 176]	-20 to +80 [-4 to 176]
Max. Extension Force in N	9.0	16.0	21.0	1.50	5.00
Min. Retraction Force in N	5.5	4.0	8.0	1.00	3.50
Linear Resolution[2)] in µm	63	77	77	31	52
Drum Circumference in mm [in]	Ø 260 [10.2]	Ø 315 [12.4]	Ø 315 [12.4]	Ø 125 [4.9]	Ø 215 [8.5]
Type Key	L..-..F-.H..	L..-..G-.H.	L..-..H-.H..	L..-..N-.C..	L..-..M-.C..

1) Other interfaces available on request
2)Based on an encoder with 12 Bit Resolution

Please refer to the product finder on our website for all possible combinations.

PRODUCT SELECTION GUIDE LINARIX LINEAR SENSORS

LINARIX Linear Sensors

	1			2						3		4		5		6	7	8		9	
L		0	–						–						–						

1 Technology

W Draw Wire Only
D Optic (Diode)
M Magnetic

2 Communication Interface

00000 Draw Wire Only
AV001 Voltage: 0 to 5 V
AVP01 Voltage: 0 to 5 V w. Pushbuttons
AV002 Voltage: 0 to 10 V
AVP02 Voltage: 0 to 10 V w. Pushbuttons
AC005 Current: 4 to 20 mA
ACP05 Current: 4 to 20 mA w. Pushbuttons
P100B Parallel Binary with Preset
P100G Parallel Gray with Preset
S101B SSI Binary
S101G SSI Gray
S5xxB SSI Binary + Incremental A/B/Z (RS-422)
S6xxB SSI Binary + Incremental A/B/Z (Push-Pull)
S5xxG SSI Gray + Incremental A/B/Z (RS-422)
S6xxG SSI Gray + Incremental A/B/Z (Push-Pull)
IN00I Incremental
DPC1B Profibus DP
CAA1B CANopen
CL00B CANopen Lift
D2B1B DeviceNet
IBA1B Interbus
EIB1B PROFINET IO
EEA0B EtherNet/IP
E2A1B POWERLINK
EM00B Modbus/TCP

3 Measurement Range

1 1 m
2 2 m
3 3 m
5 5 m
6 6 m
A 10 m

4 Encoder Resolution

00 Draw Wire Only
D2 12 bit
D3 13 bit
D4 16 bit

5 8 Draw Wire Enclosure

See next page for details

6 7 Connection Orientation and Protection Class

See next page for details

9 Connection Type

000 Draw Wire Only
CRW 1 m PVC Cable - Radial Exit
ARW 10 m PVC Cable - Radial Exit
CAW 1 m PVC Cable - Axial Exit
AAW 10 m PVC Cable - Axial Exit
PRL M23 12 pin - Radial Exit
PRP M23 16 pin - Radial Exit
PRT M26 26 pin - Radial Exit
PRM M12 5 pin - Radial Exit
PRN 2 x M12 5 pin - Radial Exit
PRQ M12 8 pin - Radial Exit
PAL M23 12 pin - Axial Exit
PAP M23 16 pin - Axial Exit
PAM M12 5 pin - Axial Exit
PAQ M12 8 pin - Axial Exit
H3P M12 Cable Glands x 3
H1B M12 Connector x 1
H2B M12 Connector x 2
H1C M23 Connector x 1

Please refer to the product finder on our website for all possible combinations.

PRODUCT SELECTION GUIDE LINARIX LINEAR SENSORS

Mechanical Options LINARIX Linear Sensors

Connection Orientation 6 7

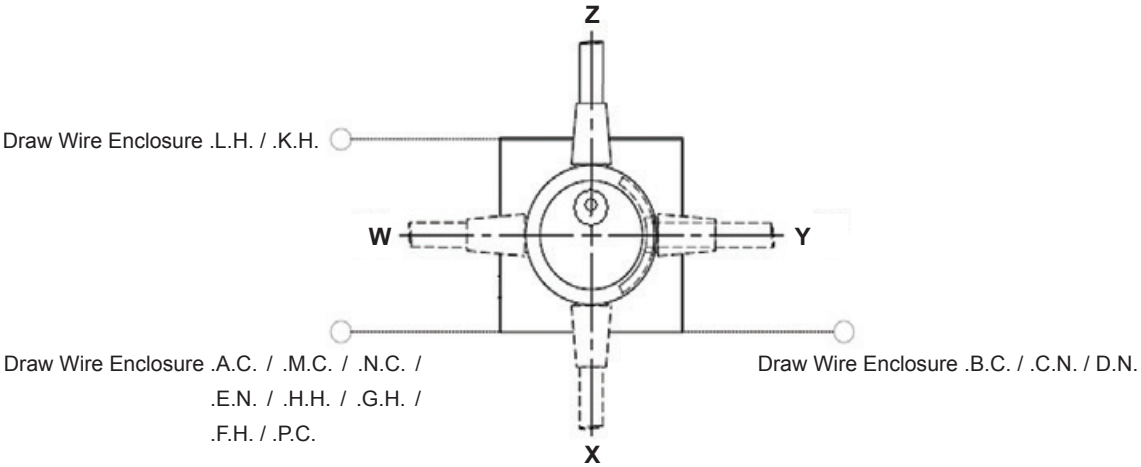

Connection Exit selected based on Draw Wire Enclosure 5. When Connection Type is “Draw Wire Only” then Connection Orientation 6 is 0.

Draw Wire Enclosure (L_ _ –_ _ _ _ _ –_ _ _ 5 – _ _ 8 _ _ _)

Die Cast Metal

LH (L_ _ –_ _ _ _ _ –_ _ _ L – _ _ H _ _ _) and KH (L_ _ –_ _ _ _ _ –_ _ _ K – _ _ H _ _ _)

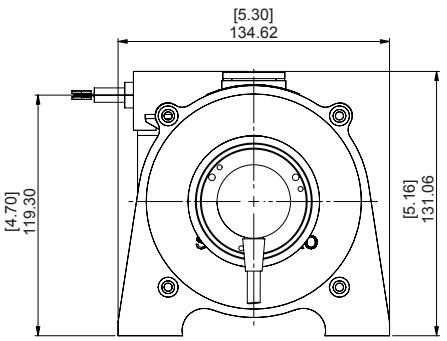

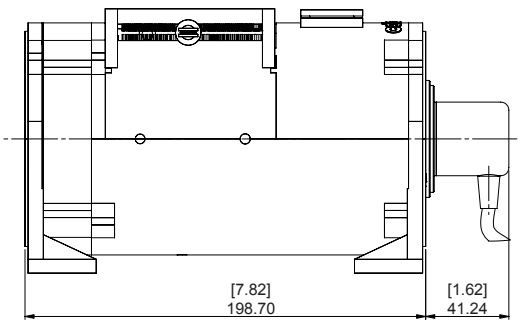

All measurement in mm

PRODUCT SELECTION GUIDE LINARIX LINEAR SENSORS

Extruded Metal

GH (L_ _ –_ _ _ _ _ –_ _ _ G – _ _ H _ _ _) and HH (L_ _ –_ _ _ _ _ –_ _ _ H – _ _ H _ _ _)

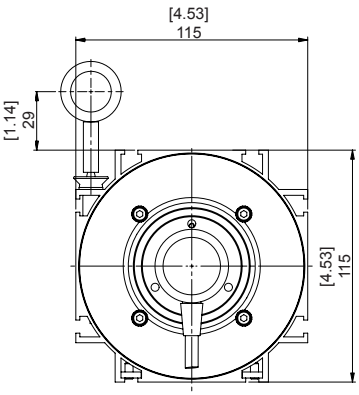

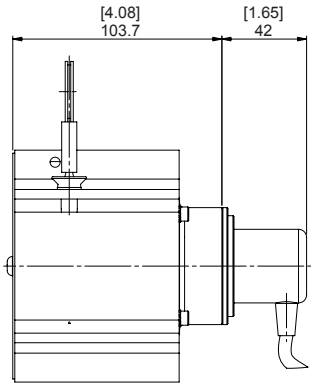

FH (L_ _ –_ _ _ _ _ –_ _ _ F – _ _ H _ _ _)

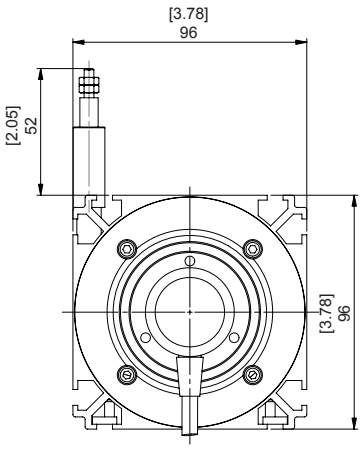

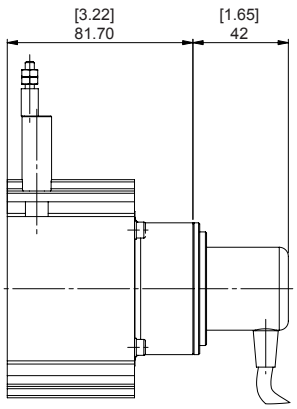

Machined Metal – Cylindrical Housing

PC (L_ _ –_ _ _ _ _ –_ _ _ P – _ _ C _ _ _)

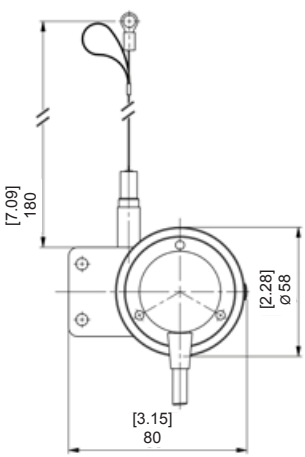

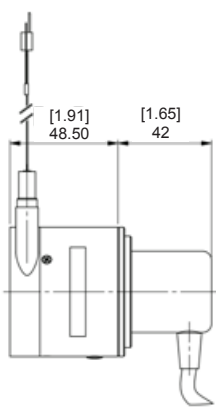

All measurement in mm

Machined Metal – Rectangular Housing

AC (L_ _ –_ _ _ _ _ –_ _ _ A – _ _ C _ _ _)

Measurement Length 1.25 m [24.2 in]

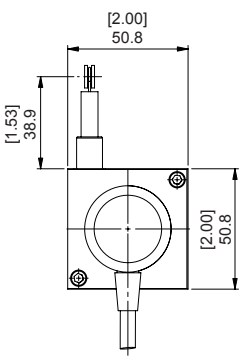

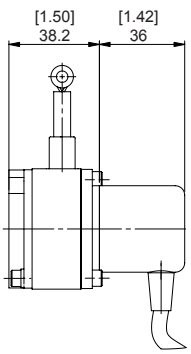

Sold & Serviced By:
SERVO2GO.com
Toll Free Phone: 877-378-0240
Toll Free Fax: 877-378-0249
sales@servo2go.com
www.servo2go.com

PRODUCT SELECTION GUIDE LINARIX LINEAR SENSORS

Machined Metal – Rectangular Housing

EN (L_ _ –_ _ _ _ _ –_ _ _ E – _ _ N _ _ _)

Measurement Length 6.00 m [236 in]

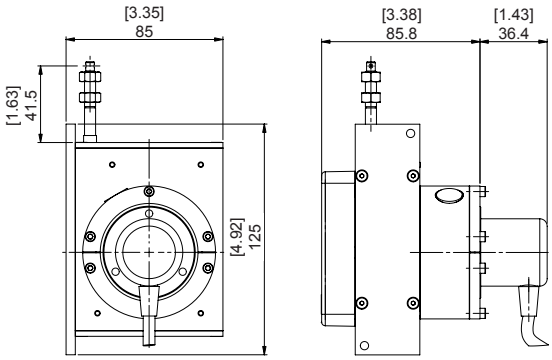

DN (L_ _ –_ _ _ _ _ –_ _ _ D – _ _ N _ _ _)

Measurement Length 3.00 m [118 in]

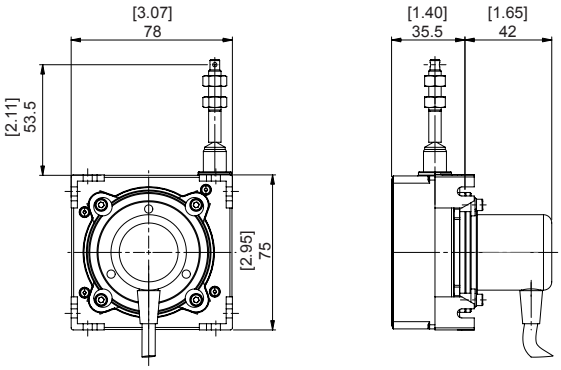

CN (L_ _ –_ _ _ _ _ –_ _ _ C – _ _ N _ _ _)

Measurement Length 2.00 m [78.7 in]

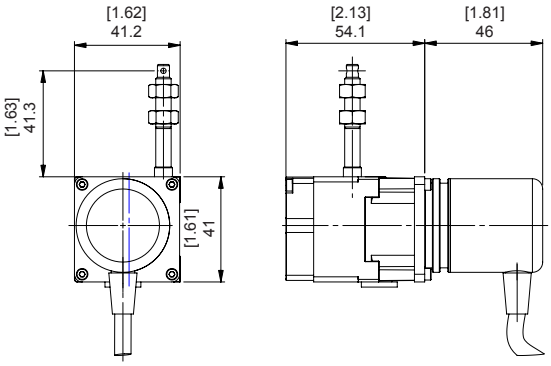

BC (L_ _ –_ _ _ _ _ –_ _ _ B – _ _ C _ _ _)

Measurement Length 3.00 m [118 in]

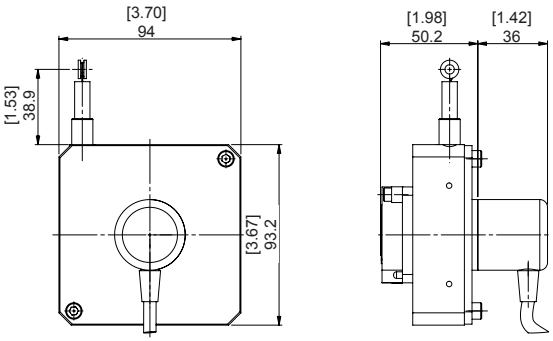

Plastic

NC (L_ _ –_ _ _ _ _ –_ _ _ N – _ _ C _ _ _)

Measurement Length 1.25 m [24.2 in]

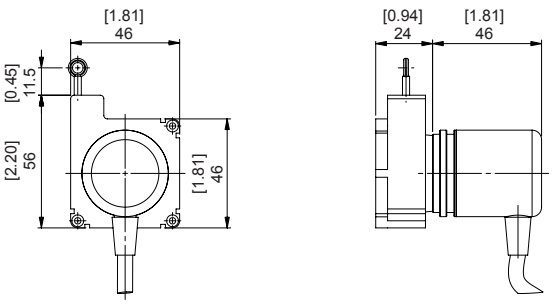

MC (L_ _ –_ _ _ _ _ –_ _ _ M – _ _ C _ _ _)

Measurement Length 2.10 m [82.7 in]

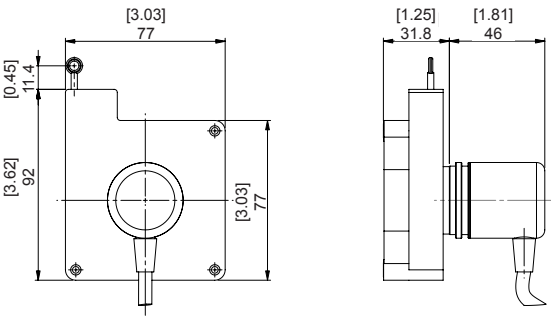

All measurement in mm

TECHNOLOGY TILTIX INCLINOMETERS

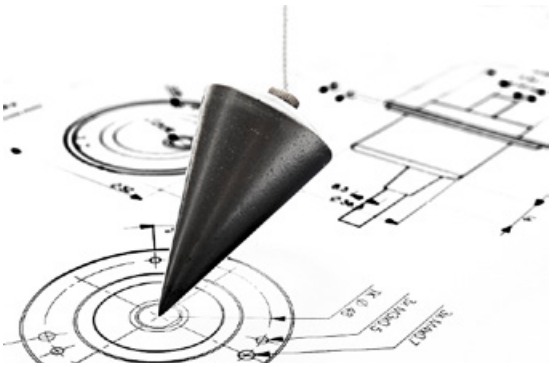

POSITAL's TILTIX Inclinometers are based on highly dynamic MEMS (Micro-Electro-Mechanical Systems) technology and on high precision Fluid Cell Technology.

MEMS

In MEMS devices, a 'micro mass' (a) is suspended in a flexible support structure (b). Any movement will induce a displacement of the mass, which will result in a change of the capacitance between the mass and the holding structure. Changes of inclination are calculated from these measured capacitance changes. These inclinometers have a measurement range of ±80° in two axes or 360° in one axis. The devices can withstand shock and vibration loadings of up to 100 g as per EN 60068-2-27.

Fluid Cell

In fluid filled inclinometers a sensor cell is partially filled with an electrolytic liquid (c) and the walls are covered with a pair of electrodes (d). As the senor tilts, the level of fluid covering the electrodes changes. This results in an increase or decrease of conductivity between the electrodes. From this measurement tilt can be calculated. Fluid Cells are capable of measuring inclinations of up to ±30° with a very high level of precision. The natural damping of liquids makes these inclinometers precise as well as stable.

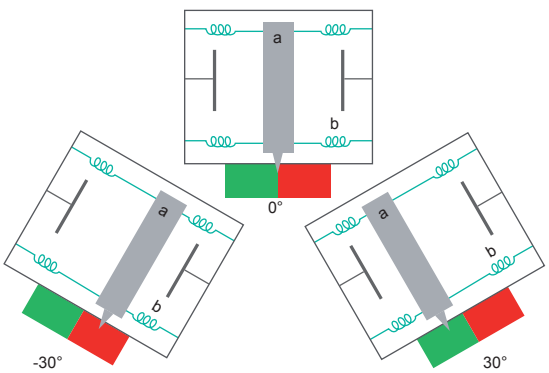

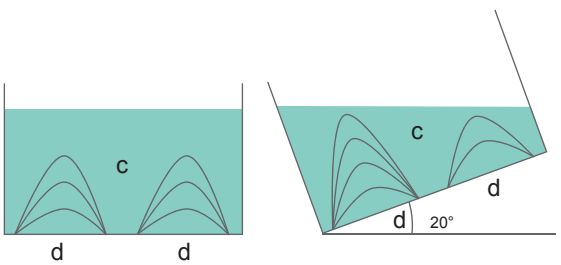

PRODUCT OVERVIEW TILTIX INCLINOMETERS

Inclinometers with MEMS Technology



Highlights	MEMS Programmable Analog	MEMS SSI	MEMS Bus Interfaces
Protection Class	Up to IP69K / IP68	Up to IP69K / IP68	Up to IP69K / IP68
Communication Interface	Analog, Voltage, Current	SSI	CANopen, DeviceNet, SAE J1939
Technology	MEMS	MEMS	MEMS
Max Measurement Range	2-axis ±80° / 1-axis 0 to 360°	1-axis 0° to 360°	2-axis ±80° / 1-axis 0 to 360°
Resolution	0.01°	0.04°	0.01°
Accuracy	0.1°	0.1°	0.1°
Material Housing	Aluminum	Aluminum	Aluminum
Shock / Vibration[1)]	100 g / 20 g	100 g / 20 g	100 g / 20 g
Temperature in °C [°F]	-40 to +85 [-40 to 185]	-40 to +85 [-40 to 185]	-40 to +85 [-40 to 185]
Supply Voltage	10 to 30 V	5 to 30 V	10 to 30 V
Connection Type	Cable / Connector (M12)	Cable / Connector (M12)	Cable / Connector (M12)
Certificates	CE	CE	CE
Type Key	ACS-…-H2-..	ACS-..-S1…-H2	ACS-..-CA/D1…-H2-..

1) Based on (EN 60068-2-27) / (EN 60068-2-6)

Please refer to the product finder on our website for all possible combinations.

PRODUCT OVERVIEW TILTIX INCLINOMETERS

Inclinometers with MEMS and Fluid Cell Technology

Highlights	MEMS Programmable Analog	MEMS SSI	MEMS Bus Interfaces	Fluid Cell Analog	Fluid Cell CANopen
Protection Class	Up to IP69K / IP68	Up to IP69K / IP68	Up to IP69K / IP68	IP67	IP67
Communication Interface	Analog Voltage or Current	SSI	CANopen, DeviceNet, SAE J1939	Analog Voltage or Current	CANopen
Technology	MEMS	MEMS	MEMS	Fluid Cell	Fluid Cell
Max. Measurement Range	2-axis ±80° / 1-axis 0 to 360°	1-axis 0° to 360°	2-axis ±80° / 1-axis 0 to 360°	2-axis ±30°	2-axis ±30°
Resolution	0.01°	0.04°	0.01°	0.001°	0.001°
Accuracy	0.1°	0.1°	0.1°	0.01°	0.01°
Material Housing	Fiber Reinforced Plastic	Fiber Reinforced Plastic	Fiber Reinforced Plastic	Aluminum	Aluminum
Shock / Vibration[1)]	100 g / 20 g	100 g / 20 g	100 g / 20 g	30 g / 5 g	30 g / 5 g
Temperature in °C [°F]	-40 to +85 [-40 to 185]	-40 to +85 [-40 to 185]	-40 to +85 [-40 to 185]	-40 to +85 [-40 to 185]	-40 to +85 [-40 to 185]
Supply Voltage	10 to 30 V	5 to 30 V	10 to 30 V	10 to 30 V	10 to 30 V
Connection Type	Cable / Connector (M12)	Cable / Connector (M12)	Cable / Connector (M12)	Cable / Connector (M12)	Cable / Connector (M12)
Certificates	CE	CE	CE	CE	CE
Type Key	ACS-…-E2-..	ACS-..-S1…-E2	ACS-..-CA/D1… -E2-..	AGS-..	AGS-..

1) Based on (EN 60068-2-27) / (EN 60068-2-6)

Please refer to the product finder on our website for all possible combinations.

PRODUCT SELECTION GUIDE TILTIX INCLINOMETERS

TILTIX Inclinometer

	1			2			3		4					5	6			7	
A			–				–	–					–				–		

1 Technology

ACS MEMS

AGS Fluid Cells

2 Measurement Range

005 ±5° (AGS)

010 ±10° (ACS)

015 ±15° (AGS)

020 ±20° (ACS)

030 ±30° (AGS)

040 ±40° (ACS)

060 ±60° (ACS)

080 ±80° (ACS)

090 90° (ACS)

120 120° (ACS)

180 180° (ACS)

270 270° (ACS)

360 360° (ACS)

3 Number of Axis

1 Single Axis (ACS only)

2 Dual Axis

4 Communication Interface

CA01 CANopen (ACS)

CA1 CANopen (AGS)

D101 DeviceNet (ACS)

DP1 Profibus DP (AGS)

S101 SSI (ACS) Binary

S302 SSI (ACS) Gray

SV00 Voltage + RS232 (ACS)

SV1 Voltage + RS232 (AGS)

SC00 Current + RS232 (ACS)

SC1 Current + RS232 (AGS)

S01 RS232 (AGS)

SP1 PWM (AGS)

SS1 Switch (AGS)

5 Mounting

H Horizontal (Dual Axis)

V Vertical (Single Axis)

6 Housing Material

E2 Fibre-Reinforced Plastic

H2 Aluminum (ACS)

0H Aluminum (AGS)

7 Connection Type

PM M12 Connector (ACS)

CW Cable Exit (ACS)

P8M Connector (AGS)

CRW Cable Exit (AGS)

Please refer to the product finder on our website for all possible combinations.

PRODUCT SELECTION GUIDE TILTIX INCLINOMETERS

Mechanical Options TILTIX Inclinometer

MEMS, Fibre-Reinforced Plastic, Connector

ACS–_ _ _–_–_ _ _ _ _–_ E2–PM

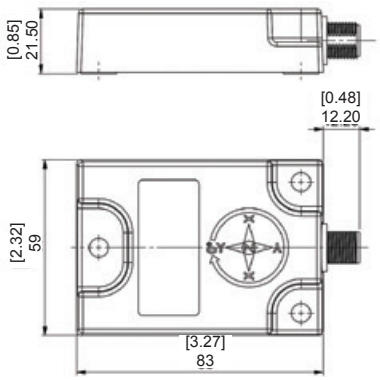

MEMS, Fibre-Reinforced Plastic, Cable

ACS–_ _ _–_–_ _ _ _ _–_ E2–CW

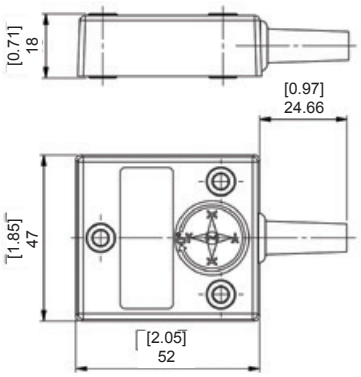

MEMS, Aluminum, Connector

ACS–_ _ _–_–_ _ _ _ _–_ H2–PM

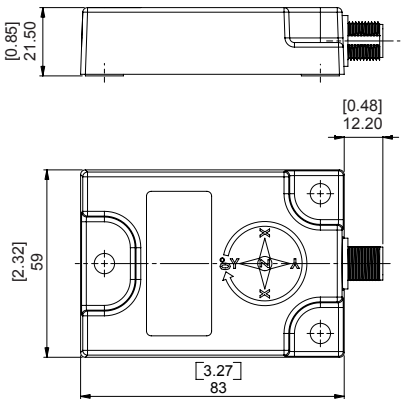

MEMS, Aluminum, Cable

ACS–_ _ _–_–_ _ _ _ _–_ H2–CW

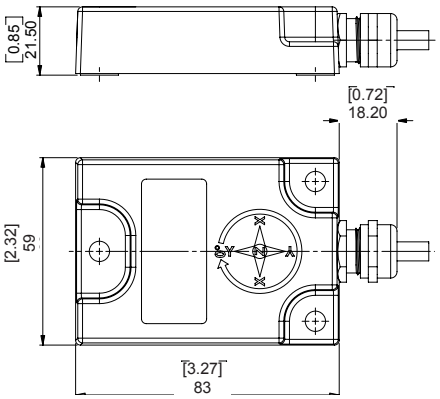

Fluid Cell, Connector

AGS–_ _ _–_–_ _ _ _–_ _ _–P8M

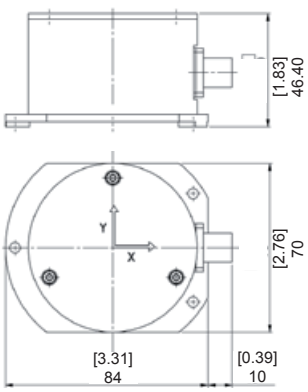

Fluid Cell, Cable

AGS–_ _ _–_–_ _ _ _–_ _ _–CRW

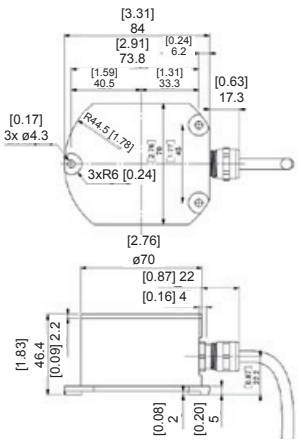

PRODUCT OVERVIEW ACCESSORIES

Mounting Fixtures

Couplings and Reducing Adapters




Product	Reducing Adapter	Couplings	Couplings	Couplings
Diameters / Sizes in mm	Ø 15 to 12, Ø 15 to 10	Ø 6 to 6, Ø 6 to 10, Ø 10 to 10	Ø 6 to 6, Ø 6 to 10, Ø 10 to 10	Ø 6 to 6, Ø 6 to 10, Ø 10 to 10
Types or Material	Stainless Steel, Aluminum	Bellow	Disc	Jaw




Product	Flange Adapters	Tethers and Clamp Rings	Clamp Discs
Features	MGY58 and Flange Adapters	Various Torque Supports and Clamping Discs	Clamp Discs to Mount Encoders onto a Surface
Material	Aluminum, Plastics	Aluminum, Stainless Steel	Aluminum

PRODUCT OVERVIEW ACCESSORIES

Electrical Connections and Interface Options

Connectors and Cables





Standards	M12	M23	M27	M12 Assembly	M23 Assembly, M27 Assembly
Lengths	–	–	–	2, 5, 10	2, 5, 10
Pins / Cables	4 pin D, 5 pin A, 8 pin A	9, 12, 16	26	4 pin D, 5 pin A, 8 pin A	9, 12, 16, 26
Material of Cable	–	–	–	PUR / PVC	PUR / PVC
Material of Connector	Metal	Metal	Metal	PBT Metal	Metal
Termination	–	–	–	Open Ends / RJ45	Open Ends
Protection Type	IP67	IP67	IP67	IP69K	IP67

Configuration and Interface Modules


Product	SSI2USB Module	Voltage Panel Display
Features	▪ Easy interface of SSI device to USB port of PC ▪ Graphical User Interface to view and store SSI Data ▪ Power Supply to SSI device (max 12 Volts) using USB Port ▪ Three independent tri-state outputs ▪ Could be used as a Virtual Com port device	▪ Measures voltage from 0 to 40 V DC ▪ 2.4” color TFT screen ▪ Use PanelPilot software, to setup and customize the display ▪ Programmable via the USB interface ▪ Simple panel mounting solution ▪ Wide operating voltage of 4 V to 30 V DC

GLOSSARY

Analog	A common standard with either a voltage or a current output
ATEX / IECEx	ATEX and IECEx norms define essential requirements for equipment and protective systems intended for use in potentially explosive atmospheres
CANopen	CANopen is a fieldbus protocol using CAN networks
CANopen Lift	CANopen Lift is a fieldbus protocol for elevator applications
CE	With the CE marking POSITAL declares that the product conforms with essential requirements of the applicable EC directives
DeviceNet	DeviceNet is a fieldbus system based on CAN networks and CIP protocol, managed by ODVA, widely used in factory automation and available on many PLCs
EtherNet/IP	EtherNet/IP is an industrial communication protocol developed by Rockwell Automation and managed by ODVA. It is based on CIP and TCP/IP
ETHERNET POWERLINK	Ethernet Powerlink is a real-time communication system based on Ethernet networks and managed by EPSG
Interbus	Interbus is a fieldbus technology developed by Phoenix Contact
IP54	Protected against dust and splash water from any direction
IP65	Dust tight and protected against water jets from any direction.
IP67	Dust tight and protected against temporary immersion up to 1 m
IP68	Dust tight and protected against long periods of immersion under pressure
IP69K	Dust tight and protected against high temperature (steam) and high pressure water jets from any direction
Modbus	Modbus is a serial protocol managed by the Modbus Organization
Parallel	All bits of the position output are transferred simultaneously using one line for each bit
PROFIBUS	Profibus is available on many PLCs and one of the most common fieldbus technologies in factory automation and other areas. It is based on RS485. There are different versions of Profibus and different device profiles
PROFINET	Profinet is an Industrial Ethernet standard from „Profibus&ProfiNet International“ designed for automation
SAE J1939	SAE J1939 is a fieldbus standard used for communication by the car and heavy-duty truck industry
SIL	SIL (Safety Integrity Level) is defined as a relative level of risk-reduction provided by a safety function. In accordance with the requirements of IEC 61508/EN 62061, PL e and Cat.4 according to EN ISO 13849-1
SSI	SSI is a widely used serial interface with point-to-point connection between PLC/Master and encoder. It is based on the RS422 standard
UL	UL (Underwriters Laboratories) is a US based consulting and certification company providing safety standards for electrical devices. UL marking confirms the compliance with applicable UL safety standards