LinTech®

Profile Rail Linear Guides

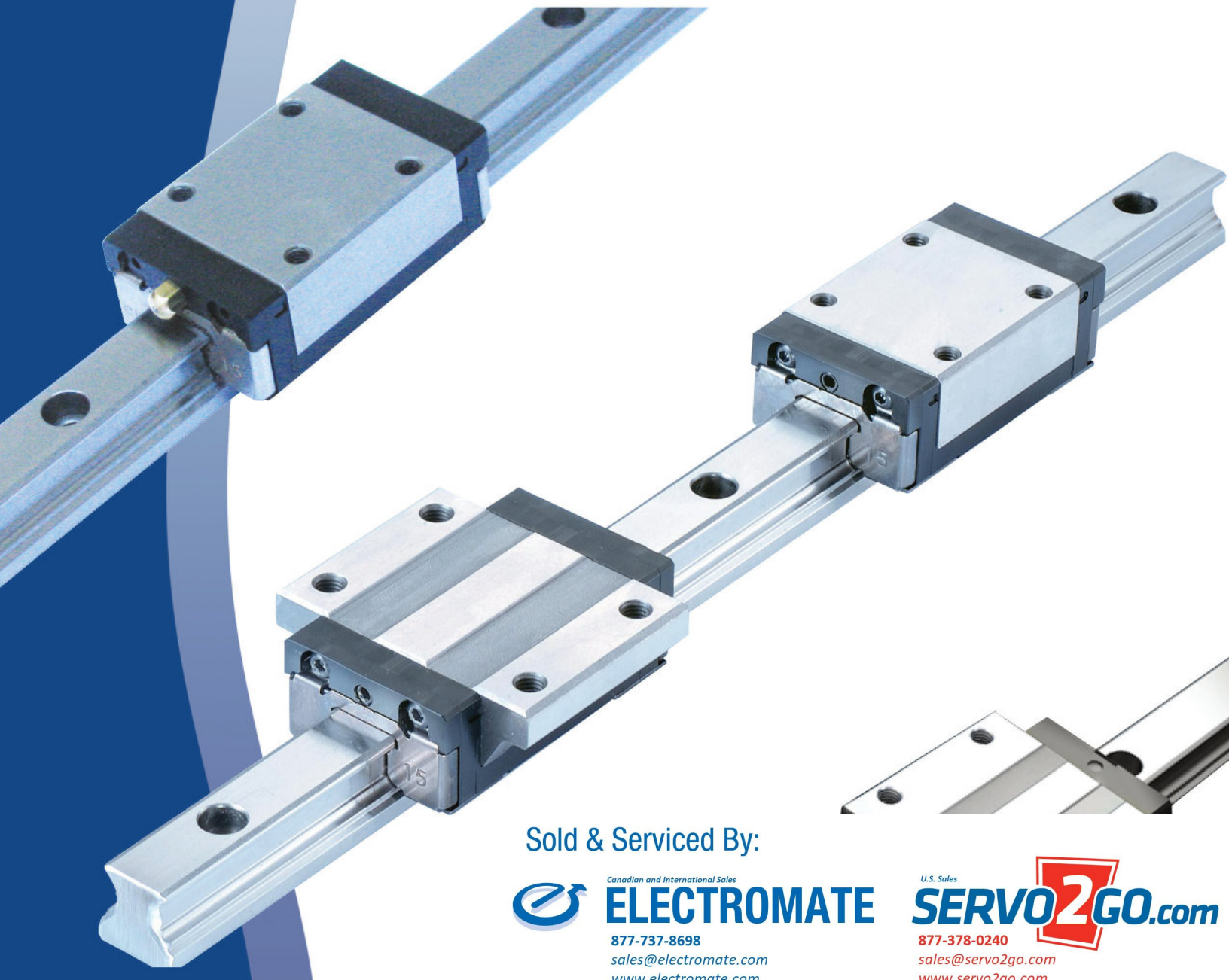

Sold & Serviced By:

Canadian and International Sales
ELECTROMATE
877-737-8698
sales@electromate.com
www.electromate.com

U.S. Sales
SERVO2GO.com
877-378-0240
sales@servo2go.com
www.servo2go.com

Welcome to *LINTECH*®

For over 50 years *LINTECH* has designed, engineered, and manufactured linear positioning components for use in a wide range of applications. Whether it is a standard positioning component or a custom positioning assembly, *LINTECH* takes great pride in manufacturing a quality product.

At *LINTECH* we are proud to provide the motion control user with this product guide. It was developed to assist you with the design, selection, and implementation of mechanical positioning components.

Depending on the requirements, standard positioning components, or systems, can often be assembled and shipped in less than 2 weeks. Custom positioning assemblies require a different approach. We evaluate your special application, use our many years of experience to guide you, and then manufacture a quality product designed to meet your performance specifications.

LINTECH's technical support consists of a well trained inside customer service department, an experienced application engineering staff, and a versatile machining facility.

Our local technical support group consists of Automation Specialists located throughout the World. These Automation Specialists are experienced in the use of electronic and mechanical motion control products. They are well trained on the performance capabilities of *LINTECH* positioning components.

LINTECH is constantly designing new products and improving upon the many options available with our standard products. Whether it is a standard or custom positioning system required, visit our website, call, or e-mail us. We look forward to hearing from you.

version: 01/2021

Table of Contents

ARC series

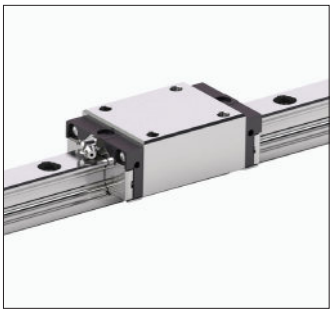

* Standard profile height bearing blocks
* Standard and Flanged wide bearing blocks
* Short, Standard, and Long length bearing blocks
* 15, 20, 25, 30, 35, 45 and 55 mm rail sizes
* Alloy steel bearing, rail, and balls
* 4 rows of re-circulating balls
* Equal loading in all directions
* N, H, P, SP and UP accuracy grades
* Light, Medium, and Heavy preload options
* Low noise Ball Chain *optional*
* Self lube reservoir *optional*

HRC series

* Heavy / High profile height bearing blocks
* Standard and Flanged wide bearing blocks
* Standard, and Long length bearing blocks
* 15, 20, 25, 30, 35, 45 and 55 mm rail sizes
* Alloy steel bearing, rail, and balls
* 4 rows of re-circulating balls
* Equal loading in all directions
* N, H, P, SP and UP accuracy grades
* Light, Medium, and Heavy preload options
* Low noise Ball Chain *optional*
* Self lube reservoir *optional*

WRC series

* Wide Rail linear guides
* Standard and Flanged wide bearing blocks
* Standard length bearing blocks
* 21/15 and 27/20 mm rail sizes
* Alloy steel bearing, rail, and balls
* 4 rows of re-circulating balls
* Equal loading in all directions
* N, H, P, SP and UP accuracy grades
* Light, Medium, and Heavy preload options
* Low noise Ball Chain *optional*
* Self lube reservoir *optional*

ARR series

* Standard profile height roller bearing blocks
* Standard and Flanged wide roller bearing blocks
* Standard, and Long length roller bearing blocks
* 35 and 45 mm rail size
* Alloy steel bearing, rail, and rollers
* 4 rows of re-circulating rollers
* Equal loading in all directions
* H, P, SP and UP accuracy grades
* Light, Medium, and Heavy preload options
* Low noise Ball Chain *optional*

HRR series

* High profile height roller bearing blocks
* Standard and Flanged wide roller bearing blocks
* Standard, Long and Extra Long length roller bearing blocks
* 35 and 45 mm rail size
* Alloy steel bearing, rail, and rollers
* 4 rows of re-circulating rollers
* Equal loading in all directions
* H, P, SP and UP accuracy grades
* Light, Medium, and Heavy preload options
* Low noise Ball Chain *optional*

LRR series

* Low profile height roller bearing blocks
* Standard and Flanged wide roller bearing blocks
* Standard, Long and Extra Long length roller bearing blocks
* 35 and 45 mm rail size
* Alloy steel bearing, rail, and rollers
* 4 rows of re-circulating rollers
* Equal loading in all directions
* H, P, SP and UP accuracy grades
* Light, Medium, and Heavy preload options
* Low noise Ball Chain *optional*

Product Characteristics

The ARC, HRC, and WRC linear guide series use the O-type arrangement for its four row ball circulation design. This 45 degree contact angle between the rail and the block's recirculating balls allow for a four directional load effect. Also, the use of larger ball diameter, and greater quantity of recirculating balls in our blocks, allows for a 10-30% greater load capacity than similarly sized competitor bearing block products. This and other characteristics are the source of our product's high load capacity, moment load ratings, and stiffness features.

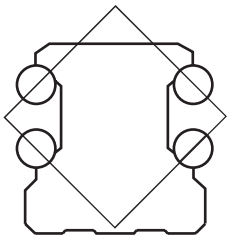

O-type recirculating balls on rail arrangement

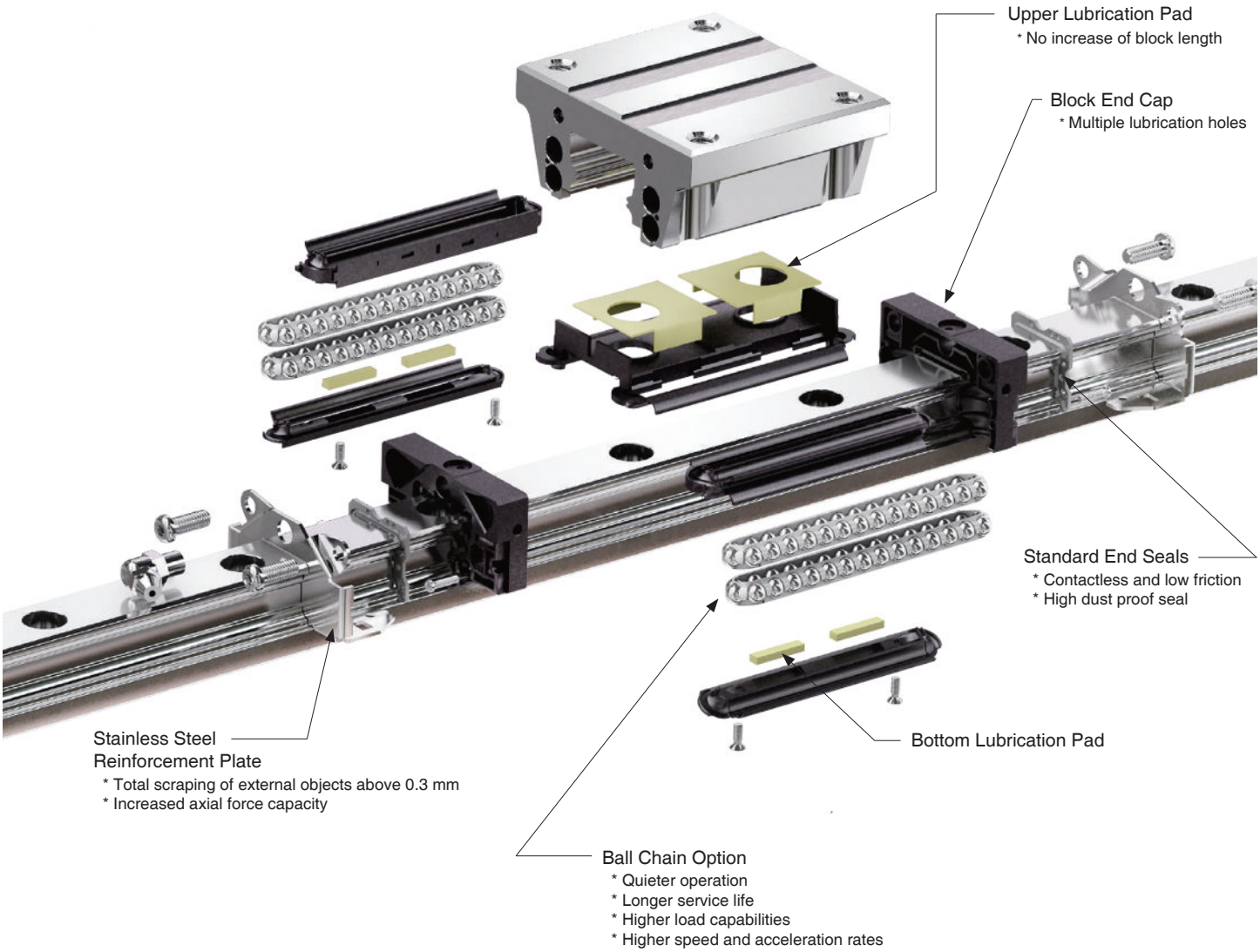

Lubrication

The recirculating balls in the block and the linear guide raceway will be separated at the contact zone by a micron-thick layer of oil. This lubrication reduces friction, helps prevent oxidation, reduces wear, dissipates heat, and increases overall service life. While every application is different, lubrication frequency should be based on load, acceleration, speed, and environment.

Multi-Directional (All-Direction) Lubrication Nozzles

The ARC, HRC, and WRC block features lubrication ports on the top, bottom, and sides, allowing for installation of optional grease nipples for relubrication. The top port comes standard with a O-ring to allow for easy relubrication. The internal comprehensive lubrication injection design allows for lubrication to both sides of the bearing block.

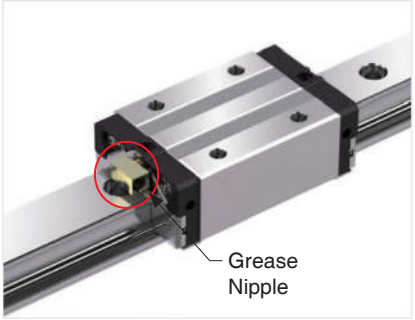

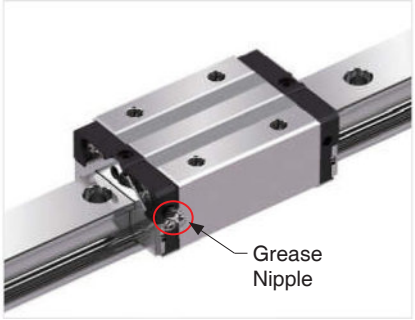

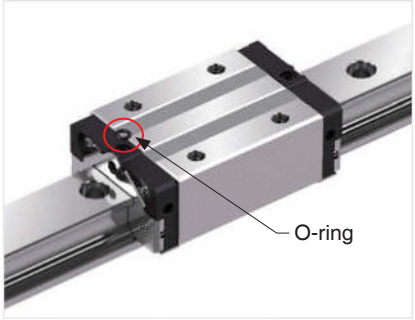

Block Lubrication Pad - Z Option

The inner **Z option** Lubrication Storage pad design does not increase the overall length of the bearing block and can effectively lubricate all the recirculating balls in the bearing block. Lubrication oil can be injected directly into any of the bearing block's ports to ensure a sufficient lubricant storage in the inner pads. This not only enables long term lubrication effects, but also a higher degree of ease at conforming to environment protection needs and lowering maintenance costs. For short stroke movements, this lubrication storage pad option allows for highly effective lubrication of the bearing block.

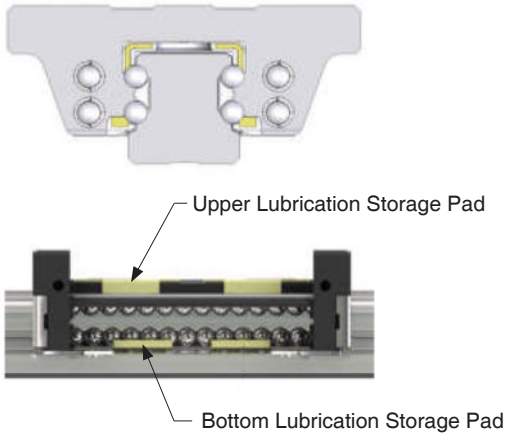

Block Seals

The ARC, HRC, and WRC block seals are comprised of a uniquly designed Inner seal, Bottom seal, and End seal design that is enhanced by the addition of a stainless steel reinforcment plate. This comprehensive sealing design significantly reduces re-lubrication needs and also prolongs the service life of the bearing block.

The **Inner Seals** protect the rail from external foreign particles and keep the lubrication inside the block, all while maintaining a low friction profile.

The **Bottom Seals** work in conjuction with the Inner seals by keeping foreign particles out of the recirculating balls in the block while keeping lubrication from leaking out of the block.

The **End Seals** also work in conjuction with the Inner and Bottom seals by keeping foreign particles out of the recirculating balls in the block while keeping lubrication from leaking out of the block. Our engineered plastic has a strong friction resistance and is less prone to cracking than typical NBR plastics.

The L type **Stainless Steel Reinforcement Plate** allows for screws to be fastened onto the top and bottom of the block, reinforcing the block end cap rigidity and therefore helping in the support of the thrust forces the recirculating balls produce in the block end caps. This design allows for higher linear speed and acceleration rates of the block versus other competitors. This reinforcement plate also functions as a scraper for larger particulates like iron filings, and has no more than 0.3 mm clearance between the plates and the rail.

The **Standard Seals (S)** are in direct contact with the rail surface, giving them increased dustproof and lubrication retention capabilities. This class of seal is recommended for blocks that operate in environments high in foreign particles, such as sawdust, for long periods of time. The S-type seals will have a higher friction force than the B-type seals.

The **Low Friction Seals (B)** have a slight contact with the rail surface, and are suitable for most environments, with both a low friction force and scraper function.

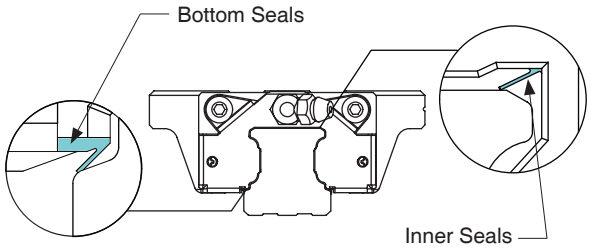

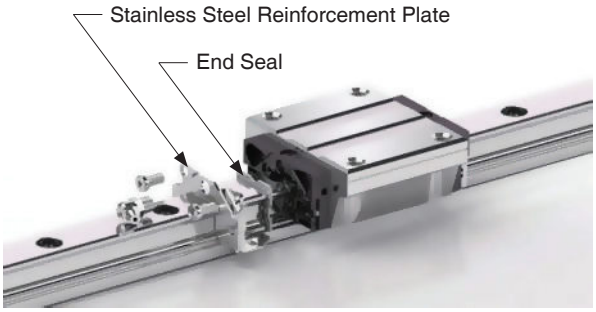

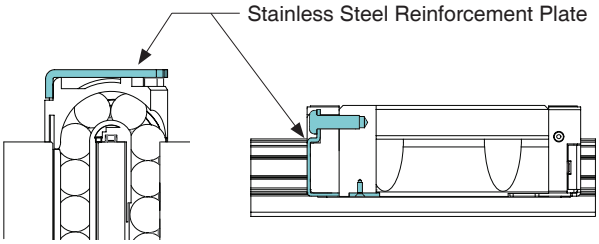

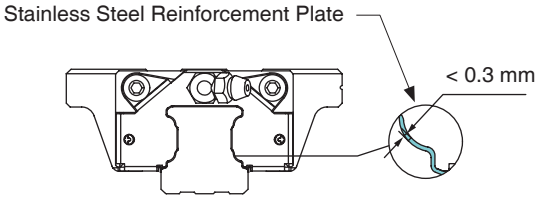

Maximum Velocity = 10 meters/sec (39.4 feet/sec)

Maximum Acceleration = 450 meters/sec^2 (1,476 feet/sec^2)

Block Seals

The (**SN**) **Metal Scraper Seals** provides an extra layer of protection to the internal recirculating balls of the bearing block. While this option does add to the overall length of a bearing block, its unique rubber seal and stainless steel scrapper, are ideal for applications in harsh environments. The SN seal option is a highly effective dust and iron scrap proofing solution for the grinding, glass processing, graphite processing and wood working machinery applications. The standard S seal option is also provided when the SN seal option is selected.

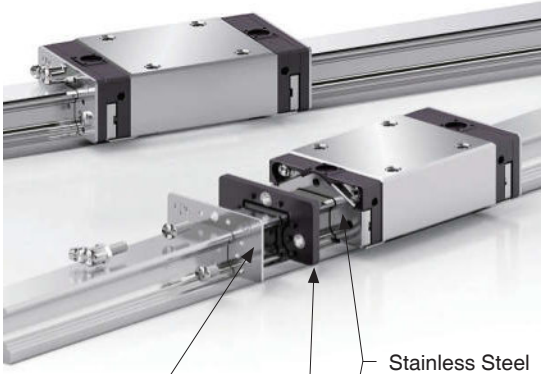

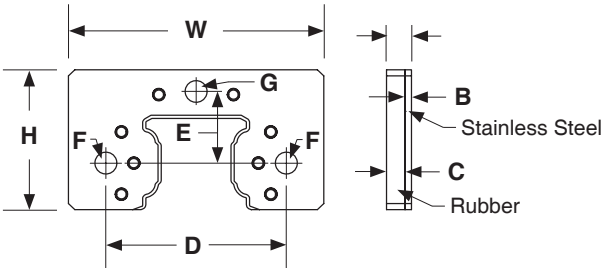

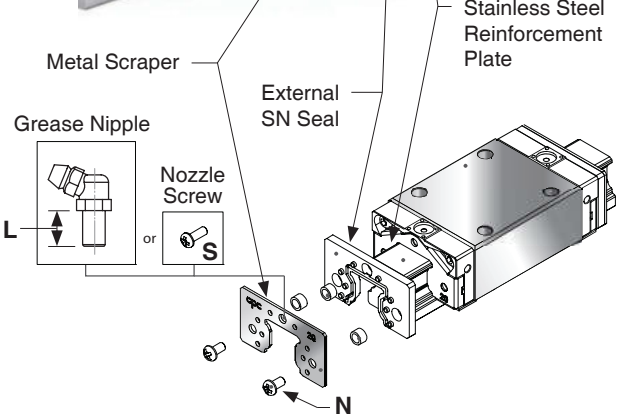

Model Number	External Dimen (mm)					Bore Specification (mm)				Screw Specification (mm)		
	A	B	C	W	H	D	E	F	G	N	S	L
15	4	1	3	33	20.3	25	10.2	3.5	3.5	M3 x 0.35	M3 x 0.5	9
20	4	1	3	41	22.5	29	11.5	3.5	3.5	M3 x 0.35	M3 x 0.5	9
25	5.2	1.2	4	47	26.5	36.5	13.5	3.5	6.5	M3 x 0.35	M6 x 0.75	12
30	6	1.5	4.5	58	34.2	42.5	17.5	4.5	6.5	M4 x 0.5	M6 x 0.75	12
35	6	1.5	4.5	68	39.3	50	20.5	4.5	10	M4 x 0.5	M6 x 0.75	12
45	6	1.5	4.5	84	49.6	65	24.9	4.5	6.5	M4 x 0.5	PT 1/8	15
55	6	1.5	4.5	98	57	73	28	5.5	6.5	M5 x 0.5	M6 x 0.75	12

ARC / HRC / WRC			
Model Number	Friction from Block Seal Versions (N)		
	B	S	SN
15	2.0	3.5	7.5
20	3.0	4.5	9.5
25	4.0	5.5	13.5
30	5.0	8.0	18.0
35	6.0	11.0	23.0
45	8.0	15.0	35.0
55	10.0	18.0	48.0

Ball Chain - C option

The **Ball Chain (C)** option is a great solution for many linear guide applications. With traditional ball type linear guides, the ball-to-ball contact as the balls recirculate in the bearing block, leads to more friction, heat, and pressure which greatly reduces the service life of the bearing block.

The Ball Chain option provides a proprietory material between each reciruclating ball within the bearing block. This provides a greater contact area between the balls and the ball chain material, which prevents the ball-to-ball contact of the recirculating balls. This provides lower operational noise, less heat generation, and lower friction. The reduction of friction between the balls also allows for higher grease retention and lower dust generation. This all leads to a higher load capacity, higher linear speed, higher acceleration, less bearing noise, longer life, and long term maintenance free (lubrication free) operation, all within the same size bearing block as a non-ball chain block.

Traditional Ball Type Linear Guide

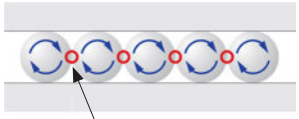

The Ball-to-Ball contact creates friction, heat, and higher surface pressure

Ball Chain Linear Guide

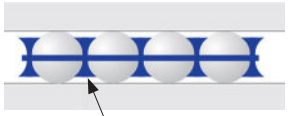

The Ball Chain material eliminates the Ball-to-Ball contact which provides less friction, less heat, less noise, and less surface pressure

Caps for Rail Mounting Holes

The no cost **Plastic Cap** is a great way to cover the rail mounting holes after the rail has been securely mounted to the user base. These caps help prevent external debris from collecting in the rail mounting hole locations.

The extra cost **Metal-Plastic Cap** is a more durable design which covers the rail mounting holes after the rail has been securely mounted to the user base. Due to the difficulty of controlling hammering strength when installing a mounting hole cap, the cap is sometimes hammered too deep, which can lead to accumulation of dirt or scrap material. The Metal-Plastic cap is designed with a supporting block to prop up the cap, which helps prevent the unnecessary sinking of the cap during installation.

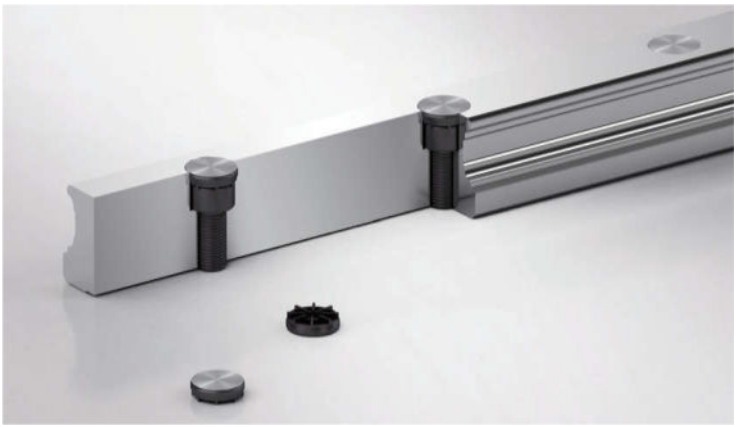

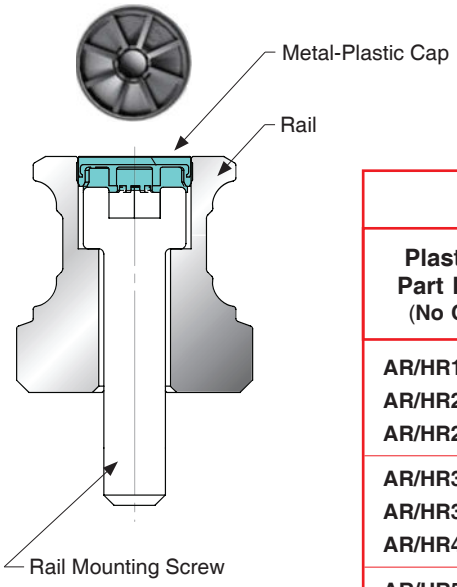

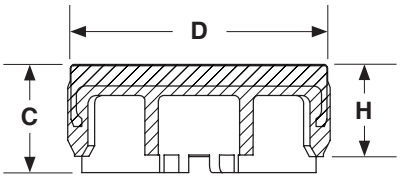

ARC & HRC						
Plastic Cap Part Number (No Charge)	**Metal-Plastic Cap Part Number**	**Rail Size**	**Rail Mounting Screw**	**D** (mm)	**H** (mm)	**C** (mm)
AR/HR15-Rail Cap	**AR/HR15-M-Rail Cap**	15	M4	7.7	1.7	2.0
AR/HR20-Rail Cap	**AR/HR20-M-Rail Cap**	20	M5	9.7	3.4	4.0
AR/HR25-Rail Cap	**AR/HR25-M-Rail Cap**	25	M6	11.3	2.9	3.5
AR/HR30-Rail Cap	**AR/HR30-M-Rail Cap**	30	M8	14.3	3.9	4.5
AR/HR35-Rail Cap	**AR/HR35-M-Rail Cap**	35	M8	14.3	3.9	4.5
AR/HR45-Rail Cap	**AR/HR45-M-Rail Cap**	45	M12	20.4	5.0	5.6
AR/HR55-Rail Cap	**AR/HR55-M-Rail Cap**	55	M14	24.4	6.0	6.5

WRC						
Plastic Cap Part Number (No Charge)	**Metal-Plastic Cap Part Number**	**Rail Size**	**Rail Mounting Screw**	**D** (mm)	**H** (mm)	**C** (mm)
WRC21/15-Rail Cap	**WRC21/15-M-Rail Cap**	15	M4	7.7	1.7	2.0
WRC27/20-Rail Cap	**WRC27/20-M-Rail Cap**	20	M4	7.7	1.7	2.0

ARR & HRR & LRR						
Plastic Cap Part Number (No Charge)	**Metal-Plastic Cap Part Number**	**Rail Size**	**Rail Mounting Screw**	**D** (mm)	**H** (mm)	**C** (mm)
ARR35-Rail Cap	**ARR35-M-Rail Cap**	35	M8	14.3	8.0	9.5
ARR45-Rail Cap	**ARR45-M-Rail Cap**	45	M12	20.4	5.0	5.6

Block and Rail Mounting Screws

The maximum load capacity of a bearing block is not only related to the internal components of the block and rail, but also the mounting hardware used to mount the rail to a user base and the hardware used to mount the load to the bearing block. The minimum tightening torque for mounting the rail to a base and the block to the user load is in the chart.

Many linear guide applications without edge support for either the rail or bearing block experience lateral forces, pull off forces, or moment loads. In these situations, the strength of the rail and block mounting screws will determine the maximum possible load capacity of the linear guide system used.

The charts below display the maximum forces allowed per rail size and block size with the use of different mounting screw tensile strengths.

When the external forces are greater than the ratings below, fixing elements should be used in the mounting procedures.

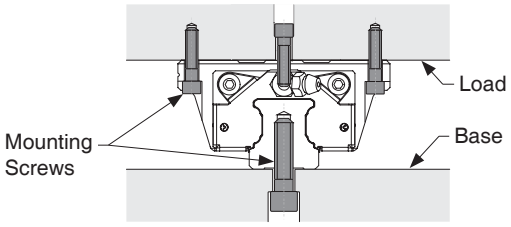

Strength Grade 12.9 Alloy Steel Screws	Mounting Screw Tightening Torque (Nm)		
	Steel	Cast Iron	Non-ferrous Metals
M3	2.0	1.3	1.0
M4	4.1	2.7	2.1
M5	8.8	5.9	4.4
M6	13.7	9.2	6.9
M8	30.0	20.0	15.0
M10	68.0	45.0	33.0
M12	118.0	78.0	59.0
M14	157.0	105.0	78.0

Mounting Screw Maximum Lateral Bearing Capacity					
Model Number	ARC & HRC & WRC			ARR & HRR & LRR	
	Short Block	Standard Block	Long Block	Standard Block	Long Block
	F_L (N)	F_L (N)	F_L (N)	F_L (N)	F_L (N)
15	240	280	320		
20	410	480	550		
25	610	710	810		
30	1200	1400	1600		
35		1400	1600	2800	3200
45		3400	3900	6900	7900
55		4800	5500		

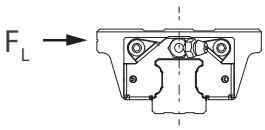

Note: The values in this chart are for a class 8.8 alloy steel mounting screw. Using a 10.9 class alloy steel screw would make the values 1.4 times larger. Using a 12.9 class alloy steel screw would make the values 1.68 times larger.

Mounting Screw Maximum Tensile Strength and Torque										
Model Number	ARC & HRC & WRC						ARR & HRR & LRR			
	Short Block		Standard Block		Long Block		Standard Block		Long Block	
	F (N)	M (Nm)	F (N)	M (Nm)	F (N)	M (Nm)	F (N)	M (Nm)	F (N)	M (Nm)
15	3200	22	3700	26	4200	30				
20	5500	51	6400	60	7300	68				
25	8100	87	9400	100	10800	120				
30	15900	210	18500	240	21100	280				
35			18500	300	21100	340	36900	590	42200	680
45			45900	970	52400	1100	91700	1900	104800	2200
55			63700	1600	72800	1800				

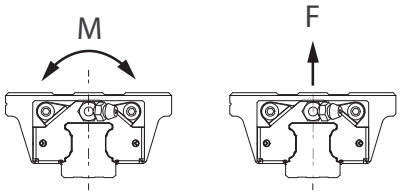

Note: The values in this chart are for a class 8.8 alloy steel mounting screw. Using a 10.9 class alloy steel screw would make the values 1.4 times larger. Using a 12.9 class alloy steel screw would make the values 1.68 times larger.

Bearing and Rail Fixing Elements

When the lateral user load is greater than the lateral load capacity provided using just bearing and rail mounting screws, additional fixing elements should be used.

The following diagrams show several common elements and styles that can be used.

Wedge block

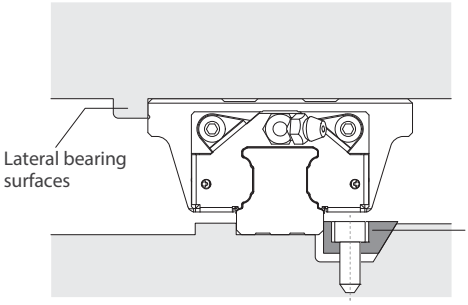

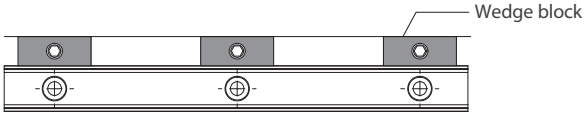

The linear guide rail is tightened by locking the bolts on the wedge block.

Binder plate

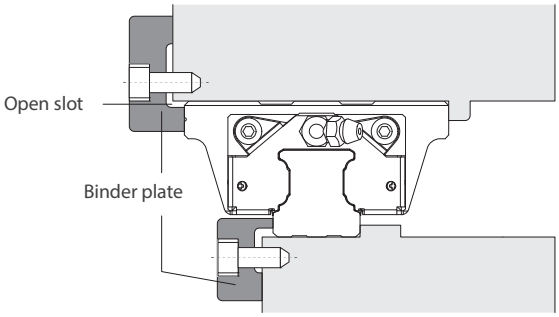

The open slot must be machined to prevent interference between the linear guide and carriage on the corners during installation.

Socket set screws

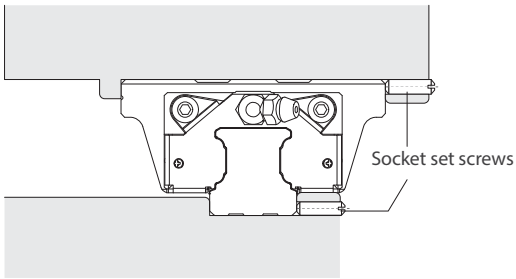

When the installation space is limited, the size of lateral mounting element must be considered.

Mandrel fixing

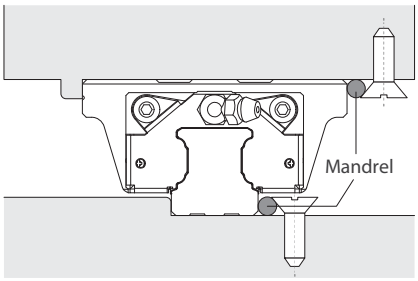

Use the slope of the nut to advance the roller to achieve the effect of tightening the linear LM guide.

Reference Edge for Block and Rail

To ensure that a linear guide is precisely mounted to the user base and load, there is a chamfer located on every block and rail. The corner of the user load and base must be smaller than the chamfer of the linear guide components to avoid any interference.

ARC & HRC					
Rail Size	R1 max (mm)	H1 (mm)	R2 max (mm)	H2 (mm)	E (mm)
15	0.5	4.0	0.5	2.5	3.3
20	0.5	5.0	0.5	4.0	5.0
25	1.0	5.0	1.0	5.0	6.0
30	1.0	6.0	1.0	5.0	6.6
35	1.0	6.0	1.0	6.5	7.6
45	1.0	8.0	1.0	8.0	9.3
55	1.5	10.0	1.5	10.0	12.0

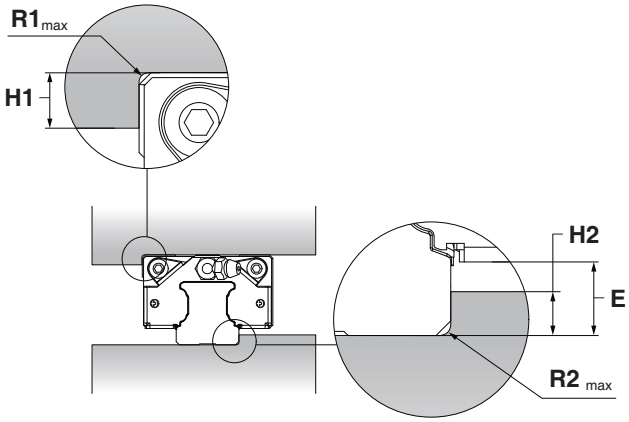

WRC					
Rail Size	R1 max (mm)	H1 (mm)	R2 max (mm)	H2 (mm)	E (mm)
21/15	0.4	5.0	0.4	2.0	2.7
27/20	0.4	5.0	0.4	3.0	3.5

ARR & HRR & LRR					
Rail Size	R1 max (mm)	H1 (mm)	R2 max (mm)	H2 (mm)	E (mm)
35	1.0	8.0	1.0	5.0	6.0
45	1.0	10.0	0.5	7.0	8.0

Rail Butt Joints

When an application calls for rail lengths longer than the standard maximum length for a given rail size, butt joining of 2 rails is the solution.

In a 1 rail application, butt joints will be labeled so that the rails can be properly mated during installation. See figure A below.

In a 2 rail application, in order to avoid accuracy effects as multiple blocks pass through a rail butt joint, the butt joints in the 2 rails should be spaced apart. See figure B below.

Figure A

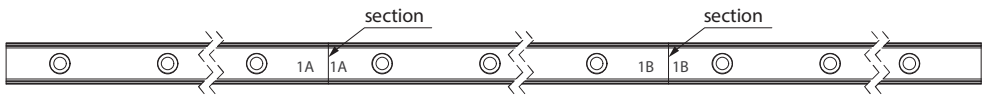

Figure B

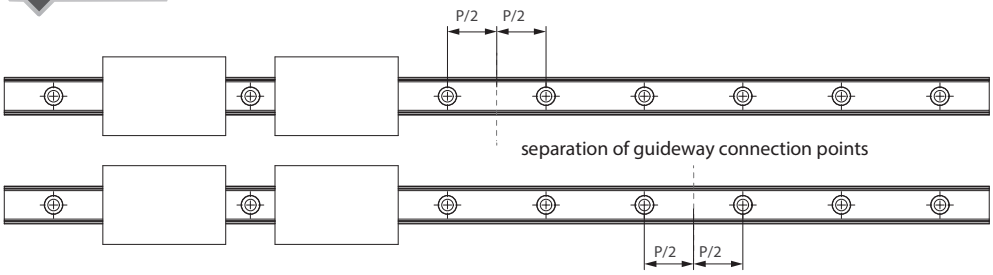

Preload & Clearance - ARC

Preload Class	Definition	Clearance (μm)							Application
		15	20	25	30	35	45	55	
V0	Light Preload	+0 to -4	+0 to -5	+0 to -6	+0 to -7	+0 to -8	+0 to -10	+0 to -12	precision applications smooth motion, low friction
V1	Medium Preload	-4 to -10	-5 to -12	-6 to -15	-7 to -18	-8 to -20	-10 to -24	-12 to -28	precision motion, high stiffness, high load
V2	Heavy Preload	-10 to -16	-12 to -18	-15 to -23	-18 to -27	-20 to -31	-24 to -36	-28 to -45	precision motion, super high stiffness, super high load

Preload & Clearance - HRC

Preload Class	Definition	Clearance (μm)							Application
		15	20	25	30	35	45	55	
V0	Light Preload	+0 to -4	+0 to -5	+0 to -6	+0 to -7	+0 to -8	+0 to -10	+0 to -12	precision applications smooth motion, low friction
V1	Medium Preload	-4 to -12	-5 to -14	-6 to -16	-7 to -19	-8 to -22	-10 to -25	-12 to -29	precision motion, high stiffness, high load
V2	Heavy Preload	-12 to -19	-14 to -23	-16 to -26	-19 to -31	-22 to -35	-25 to -40	-29 to -46	precision motion, super high stiffness, super high load

Preload & Clearance - WRC

Preload Class	Definition	Clearance (μm)		Application
		21/15	27/20	
V0	Light Preload	+0 to -4	+0 to -5	precision applications smooth motion, low friction
V1	Medium Preload	-4 to -10	-5 to -12	precision motion, high stiffness, high load
V2	Heavy Preload	-10 to -16	-12 to -18	precision motion, super high stiffness, super high load

Preload & Clearance - ARR & HRR & LRR

Preload Class	Definition	Clearance (μm)		Application
		35	45	
V0	Light Preload	-2 to -1	-2 to -1	precision applications smooth motion, low friction
V1	Medium Preload	-3 to -2	-3 to -2	precision motion, high stiffness, high load
V2	Heavy Preload	-5 to -3	-5 to -3	precision motion, super high stiffness, super high load

ARC / HRC / WRC			
Model Number	Friction from Preload (N)		
	V0	V1	V2
15 MS/FS	0.60	0.80	1.00
15 MN/FN	0.65	0.85	1.10
15 ML/FL	0.70	0.90	1.40
20 MS/FS	0.70	1.10	1.40
20 MN/FN	0.75	1.40	1.60
20 ML/FL	0.80	1.60	1.80
25 MS/FS	0.90	1.20	1.80
25 MN/FN	0.95	1.60	1.95
25 ML/FL	1.20	1.80	2.00
30 MS/FS	1.00	1.80	2.30
30 MN/FN	1.10	2.00	2.50
30 ML/FL	1.40	2.20	2.80
35 MN/FN	1.25	2.50	3.25
35 ML/FL	1.60	2.70	3.50
45 MN/FN	2.10	2.80	4.00
45 ML/FL	2.30	3.50	4.55
55 MN/FN	4.10	5.50	7.95
55 ML/FL	4.30	6.60	8.60

Accuracy

		N (μm)	H (μm)	P (μm)	SP (μm)	UP (μm)
Tolerance of Dimension Height T	T	+/- 80	+/- 40	+/- 20	+/- 10	+/- 5
Variation of Heigth for a Different Block Loacted at the Same Position on the Rail	▽T	20	15	7	5	3
Tolerance of Dimension Width W	W	+/- 40	+/- 20	+/- 10	+/- 7	+/- 5
Variation of Width for a Different Block Loacted at the Same Position on the Rail	▽W	30	15	7	5	3

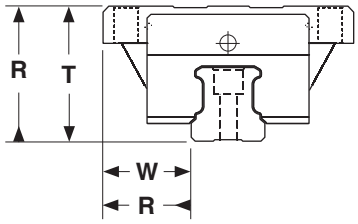

R - see graph below for Accuracy of the Running Parallelism

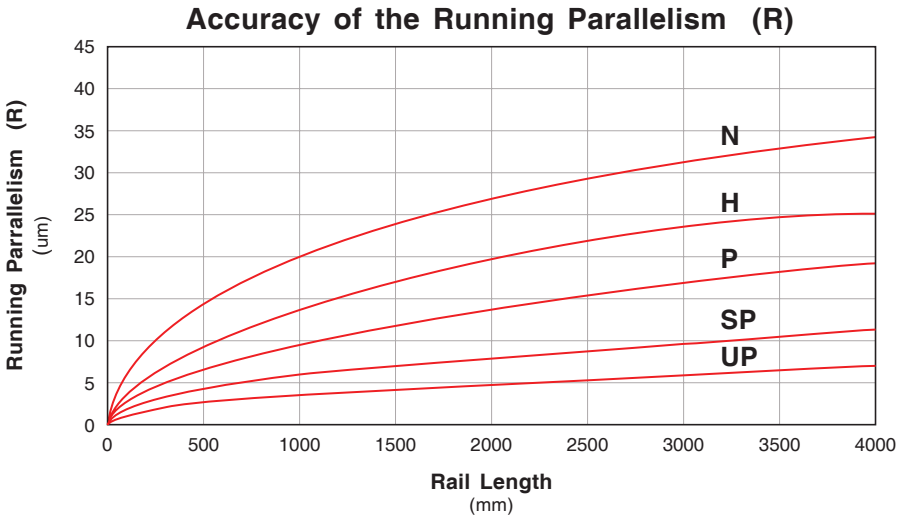

Application

Accuracy Grade	General Linear Motion Automation	Manufacturing Equipment	Precision Manufactring Equipment	Measuring Equipment
N	X	X		
H	X	X	X	
P		X	X	X
SP			X	X
UP				X
	Conveyance Systems General Automation Welding Machines Coating Machines Industrial Robots Injection Molding Office Machinery	Cartesian Coordinate Medical Equipment Injection Molding Linear Actuators Punching Press Woodworking	Semiconductor Machines Lathe, Milling, Grinding CNC Maching Center Boring, Drilling, EDM Linear Slides Laser Beam X-Y Table	Three Dimension Measuring Inspection Machines Dressing Machine Detection Mirror Wire Bonding Wire Cutting

Grease Fitting / Oil Piping Joint

Most Common Options

A - M 3

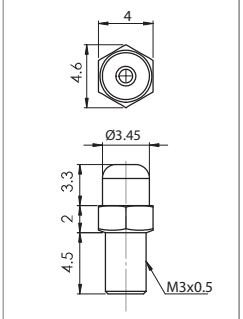

B - M 3

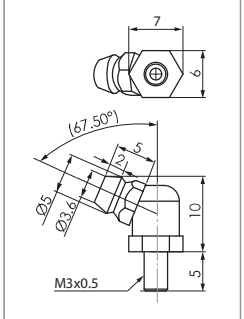

A - M 6

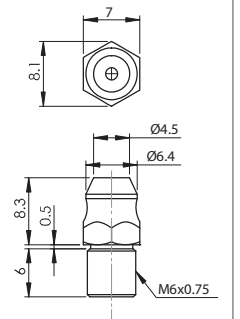

B - M 6

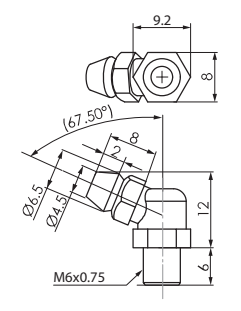

B - P T 1 / 8

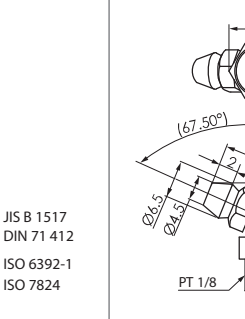

O B - M 3 - M 6

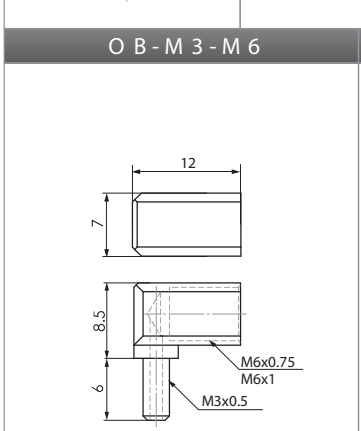

OA-M3-D4

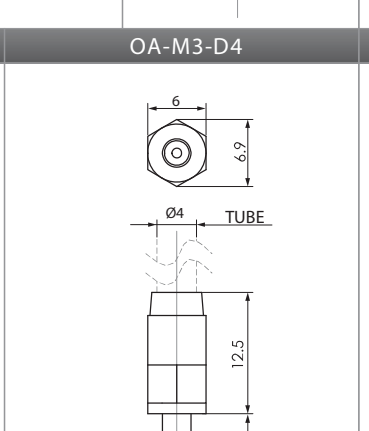

O A - M 6 - M 8

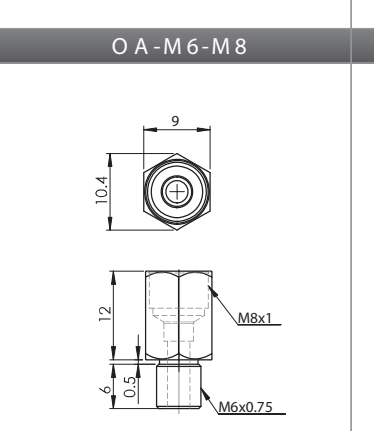

Ø 4 Oil hole grease injector available

O A - M 6 - PT1/8

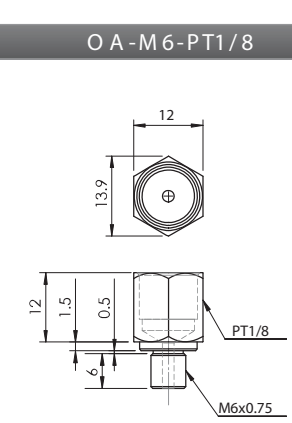

OA-M6-G1/8

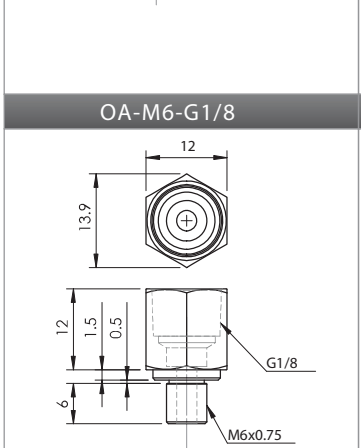

Ø 6 Oil hole grease injector available

OB-M6-M8

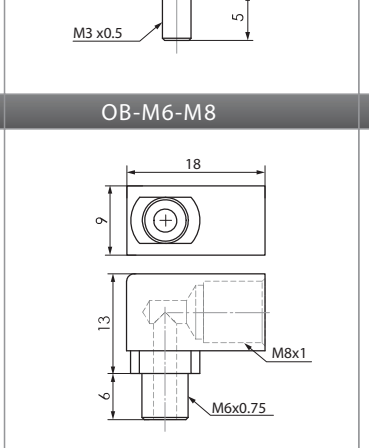

Ø 4 Oil hole grease injector available

OB-M6-PT1/8

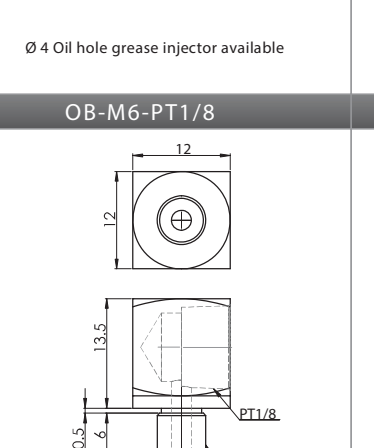

OA-PT1/8-M8

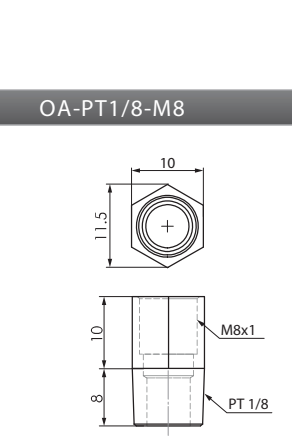

Ø 4 Oil hole grease injector available

OA-PT1/8-PT1/8

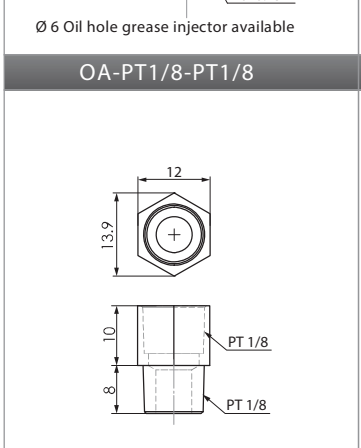

OA-PT1/8-G1/8

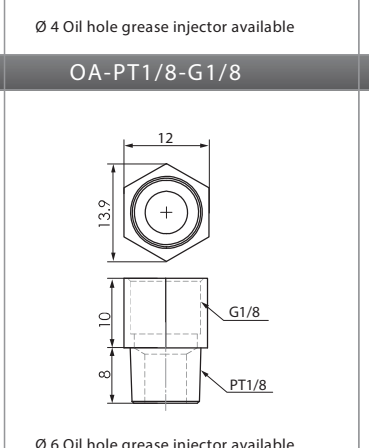

Ø 6 Oil hole grease injector available

OB-PT1/8-M8

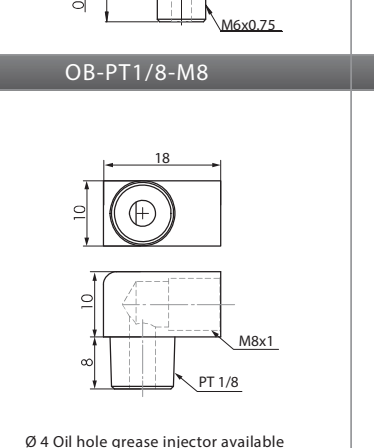

Ø 4 Oil hole grease injector available

OB-PT1/8-PT1/8

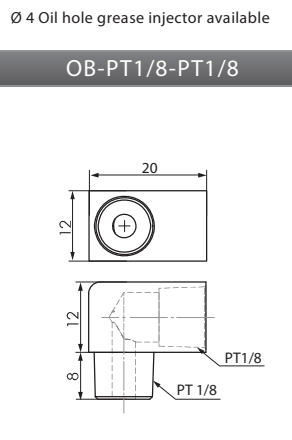

Specifications subject to change without notice

Grease Fitting / Oil Piping Joint

Used with the SN Block Seal Option

A-M3-L

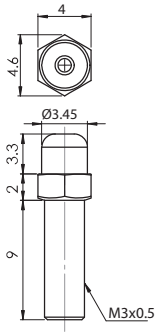

B-M3-L

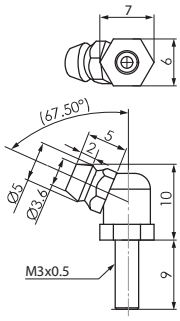

A-M6-L

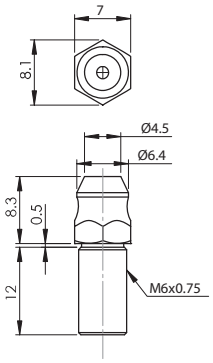

B-M6-L

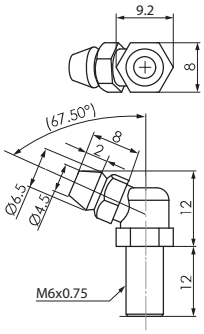

JIS B 1517 DIN 71 412
ISO 6392-1 ISO 7824

A-M6-XL

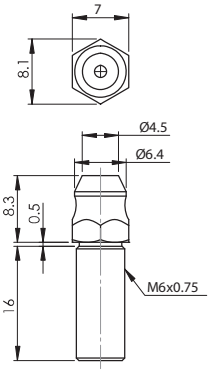

B-M6-XL

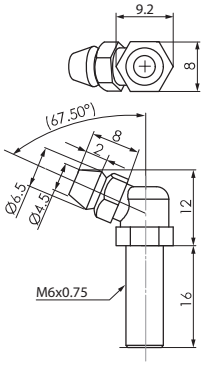

JIS B 1517
DIN 71 412
ISO 6392-1
ISO 7824

OA-M6-M8-L

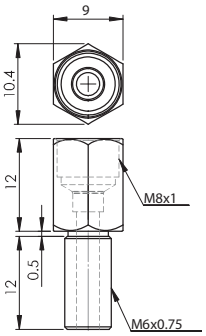

Ø 4 Oil hole grease injector available

OA-M6-PT1/8-L

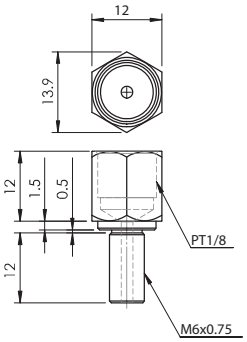

OA-M6-G1/8-L

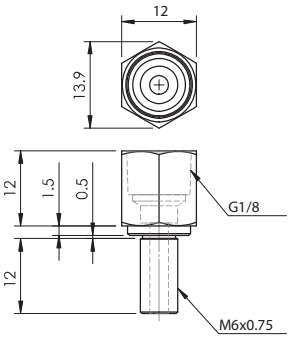

Ø 6 Oil hole grease injector available

OB-M6-M8-L

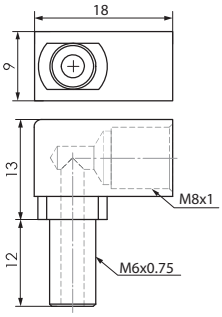

Ø 4 Oil hole grease injector available

OB-M6-PT1/8-L

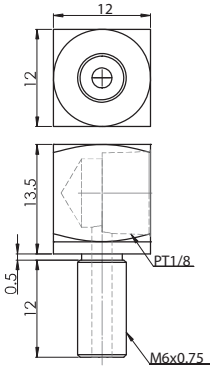

B-PT1/8-L

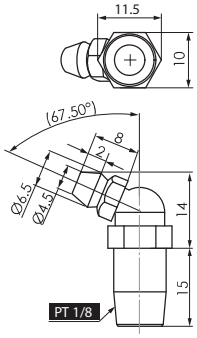

JIS B 1517
DIN 71 412
ISO 6392-1
ISO 7824

OA-M6-M8-XL

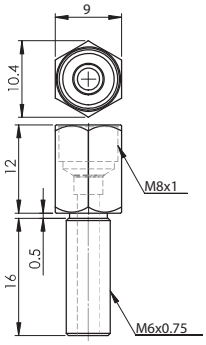

Ø 4 Oil hole grease injector available

OA-M6-PT1/8-XL

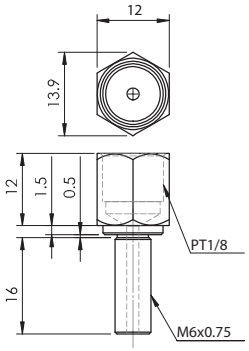

OA-M6-G1/8-XL

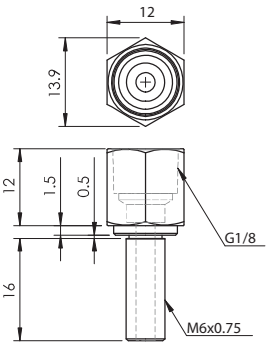

Ø 6 Oil hole grease injector available

OB-M6-M8-XL

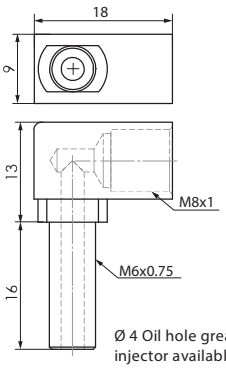

Ø 4 Oil hole grease injector available

OB-M6-PT1/8-XL

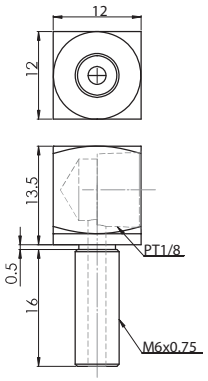

Specifications subject to change without notice

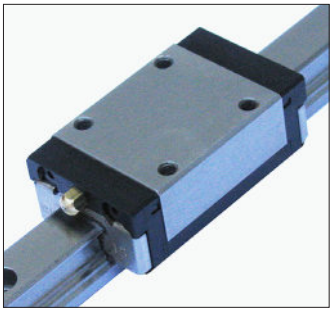

* Standard Profile Height Bearing Blocks
* Alloy steel bearing, rail, and balls
* Equal loading in all directions
* 4 rows of re-circulating balls
* Short, standard & long block
* Standard and flanged block
* 5 Different accuracy ranges
* 3 Different preload values
* 3 Different block seal options
* Any rail cut to specific length
* *Optional* - Tapped bottom rail
* *Optional* - Self lube reservoir
* *Optional* - Ball chain block
* *Optional* - Metal Scraper on block

ARC U 15 M N S Z C V1 H - 2 - 1260 - 30 - 30

Series Type

ARC - Standard Profile Rail

Rail Type

- Standard **U** - Tapped from Bottom

Profile Size

15 - 15 mm **30** - 30 mm
20 - 20 mm **35** - 35 mm
25 - 25 mm **45** - 45 mm
55 - 55 mm

Block Width

M - Standard **F** - Flanged

Block Length

S - Short **N** - Standard **L** - Long

Block Seals

S - Standard **B** - Low Friction **SN** - Metal Scraper

Block Lube

- None **Z** - Lubrication Pad

Block Bearings

- Standard **C** - Ball Chain

Preload Class

V0 - Light **V1** - Medium **V2** - Heavy

Accuracy Grade

N - Normal **H** - High **P** - Precision **SP** - Super Precision
UP - Ultra Precision

Number of Blocks

2 - Number of blocks on each rail

Rail Length

xxxx - Overall rail length (mm)

Start Hole

xx - Distance from end (mm)

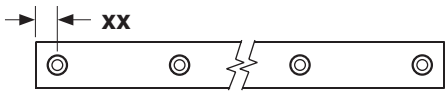

End Hole

xx - Distance from end (mm)

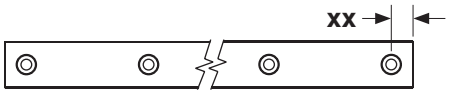

Specifications subject to change without notice

Load Capacities - ARC series

Model Number	Dynamic Load Capacity C_{50} (kN @ 50 km)		Static Load Capacity C_0 (kN)		Static Moment Loads					
					M_r (Nm)		M_p (Nm)		M_y (Nm)	
	Standard	with Ball Chain	Standard	with Ball Chain	Standard	with Ball Chain	Standard	with Ball Chain	Standard	with Ball Chain
ARC 15 MS ARC 15 FS	9.7	10.7	12.1	10.8	100	85	50	45	50	45
ARC 15 MN ARC 15 FN	12.5	14.9	17.5	16.2	140	130	105	95	105	95
ARC 15 ML	16.9	19.6	26.9	24.3	215	195	235	215	235	215
ARC 20 MS ARC 20 FS	15.7	16.9	19.3	17.1	205	185	100	85	100	85
ARC 20 MN ARC 20 FN	21.5	25.6	30.0	25.7	325	275	230	200	230	200
ARC 20 ML	25.7	34.1	38.5	34.3	415	370	390	350	390	350
ARC 25 MS ARC 25 FS	22.9	24.1	27.3	24.3	350	310	160	145	160	145
ARC 25 MN ARC 25 FN	31.2	36.2	42.5	36.4	540	465	385	340	385	340
ARC 30 MS ARC 30 FS	29.3	28.7	33.1	28.9	520	455	230	205	230	205
ARC 30 MN ARC 30 FN	41.3	49.4	53.7	49.6	845	780	565	530	565	530
ARC 30 ML	49.9	65.8	70.2	66.1	1105	1040	950	900	950	900
ARC 35 MN ARC 35 FN	57.8	69.9	82.9	70.2	1700	1575	1080	1010	1080	1010
ARC 35 ML	68.9	94.4	106.5	94.7	2185	1940	1755	1575	1755	1575
ARC 45 MN	89.8	102.5	122.1	102.8	3200	2955	1910	1775	1910	1775
ARC 45 ML	112.8	159.4	169.1	159.7	4430	4185	3460	3280	3460	3280
ARC 55 MN	161.3	N.A.	186.0	N.A.	4949	N.A.	3278	N.A.	3278	N.A.
ARC 55 ML	185.2	N.A.	226.0	N.A.	6472	N.A.	5284	N.A.	5284	N.A.

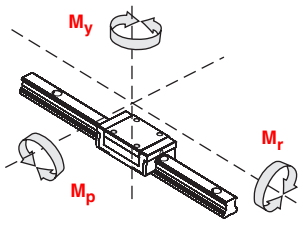

N.A. - Not Available

Dimensions & Specifications

Model Number	Outline (mm) Height H	Width W	Length L	Block Dimensions (mm) B	C	M x T	K	G	N	J	E	Rail Dimensions (mm) P	X	A	F	Q x R x S	Weight Block (kg)	Rail (kg/m)
ARC 15 MS	24	34	41.2	26	-	M4 x 7	20.7	26	M3 x 6.5	4.5	5.3	15	9.5	15	60	4.5 x 7.5 x 5.3	0.11	1.29
ARC 15 MN			55.5		26			40.3									0.16	
ARC 15 ML			76.2		34			61									0.24	
ARC 20 MS	28	42	49.2	32	-	M5 x 7	23	32.2	M3 x 7.5	4	10	20	11	20	60	6 x 9.5 x 8.5	0.17	2.28
ARC 20 MN			69		32			52									0.27	
ARC 20 ML			87.2		45			70.2									0.33	
ARC 25 MS	33	48	57.4	35	-	M6 x 9	27	38.4	M6 x 7.5	5	12	23	12.5	23	60	7 x 11 x 9	0.30	3.02
ARC 25 MN			81.2		35			62.2									0.42	
ARC 30 MS	42	60	68	40	-	M8 x 12	35.2	44	M6 x 8.5	7.5	12	28	16	27	80	9 x 14 x 12	0.56	4.38
ARC 30 MN			95.5		40			71.5									0.80	
ARC 30 ML			118		60			94									1.14	
ARC 35 MN	48	70	111.2	50	50	M8 x 13	40.4	86.2	M6 x 10	8	12	34	18	32	80	9 x 14 x 12	1.12	6.79
ARC 35 ML			136.6		72			111.6									1.54	
ARC 45 MN	60	86	135.5	60	60	M10 x 17	50.7	102.5	PT1/8 x 12.5	11.1	14	45	20.5	39	105	14 x 20 x 17	2.12	10.53
ARC 45 ML			171.5		80			138.5									3.16	
ARC 55 MN	70	100	168.5	75	75	M12 x 20	58	126.5	M6 x 10	13.5	12	53	23.5	45.7	120	16 x 24 x 20	4.20	14.0
ARC 55 ML			202		95			160									5.08	

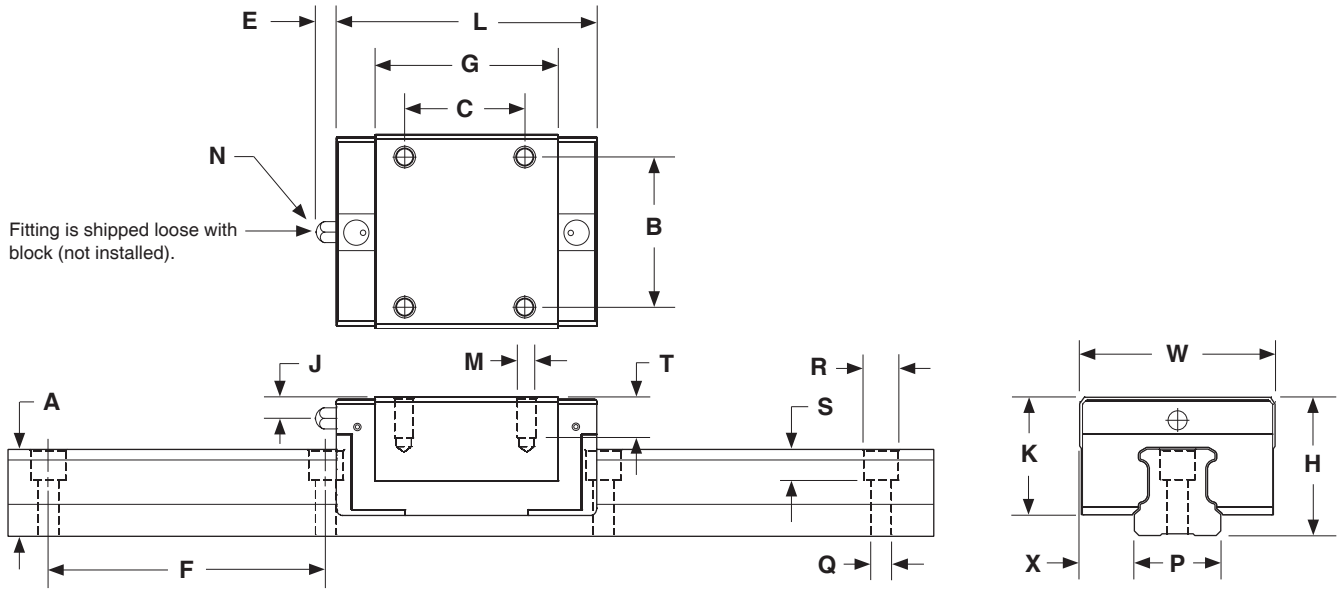

Rail Size	(mm) D x Y	P	A	F
ARCU 15	M5 x 8	15	15	60
ARCU 20	M6 x 10	20	20	60
ARCU 25	M6 x 12	23	23	60
ARCU 30	M8 x 15	28	27	80
ARCU 35	M8 x 15	34	32	80
ARCU 45	M12 x 19	45	39	105
ARCU 55	M14 x 24	53	45.7	120

Rail Tapped from Bottom

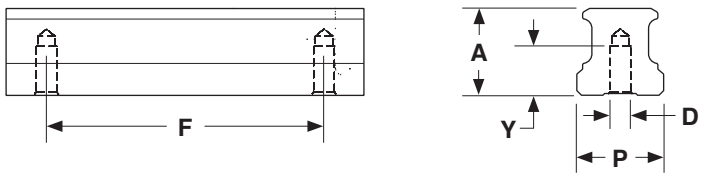

Specifications subject to change without notice

Dimensions & Specifications

Model Number	Outline (mm)			Block Dimensions (mm)									Rail Dimensions (mm)					Weight	
	Height H	Width W	Length L	B	C	M x T	V	K	G	N	J	E	P	X	A	F	Q x R x S	Block (kg)	Rail (kg/m)
ARC 15 FS ARC 15 FN	24	52	41.2 55.5	41	- 26	M5 x 7	M4	20.7	26 40.3	M3 x 6.5	4.5	5.3	15	18.5	15	60	4.5 x 7.5 x 5.3	0.13 0.20	1.29
ARC 20 FS ARC 20 FN	28	59	49.2 69	49	- 32	M6 x 10	M5	23	32.2 52	M3 x 7.5	4	10	20	19.5	20	60	6 x 9.5 x 8.5	0.21 0.34	2.28
ARC 25 FS ARC 25 FN	33	73	57.4 81.2	60	- 35	M8 x 10	M6	27	38.4 62.2	M6 x 7.5	5	12	23	25	23	60	7 x 11 x 9	0.35 0.53	3.02
ARC 30 FS ARC 30 FN	42	90	68 95.5	72	- 40	M10 x 12	M8	35.2	44 71.5	M6 x 8.5	7.5	12	28	31	27	80	9 x 14 x 12	0.75 1.20	4.38
ARC 35 FN	48	100	111.2	82	50	M10 x 13	M8	40.4	86.2	M6 x 10	8	12	34	33	32	80	9 x 14 x 12	1.58	6.79

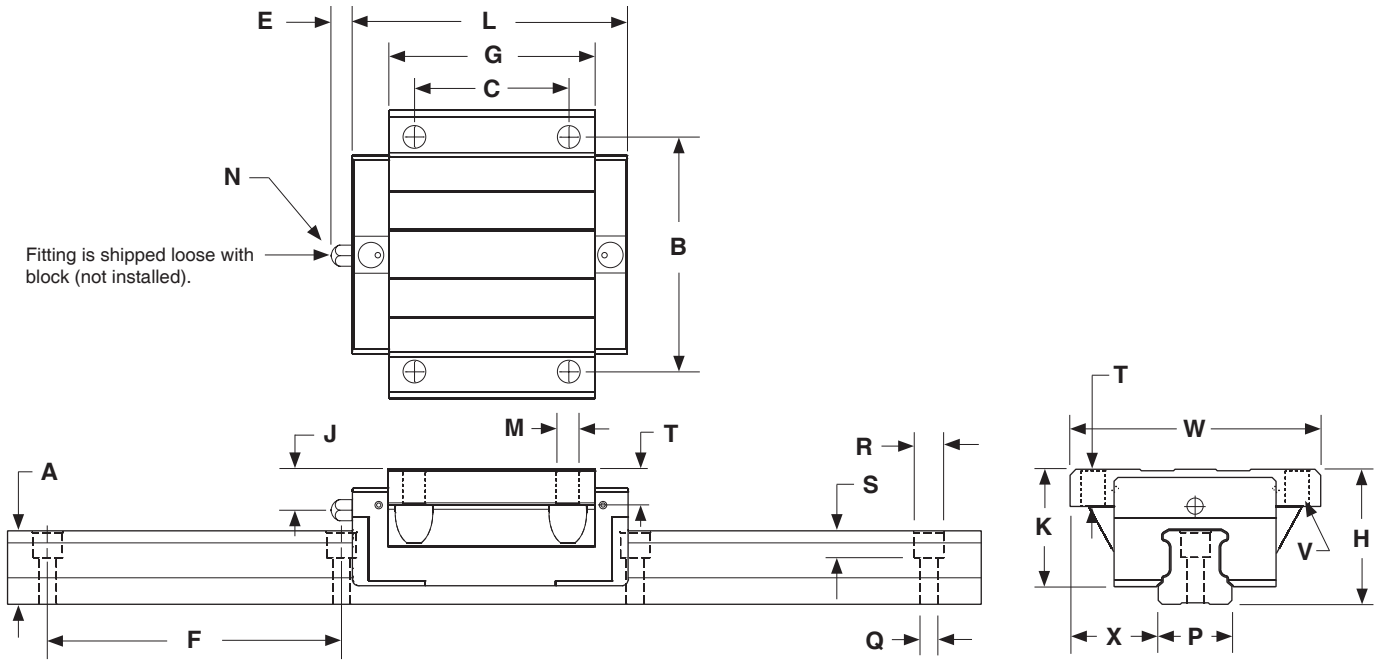

Rail Size	(mm) D x Y	P	A	F
ARCU 15	M5 x 8	15	15	60
ARCU 20	M6 x 10	20	20	60
ARCU 25	M6 x 12	23	23	60
ARCU 30	M8 x 15	28	27	80
ARCU 35	M8 x 15	34	32	80
ARCU 45	M12 x 19	45	39	105
ARCU 55	M14 x 24	53	45.7	120

Rail Tapped from Bottom

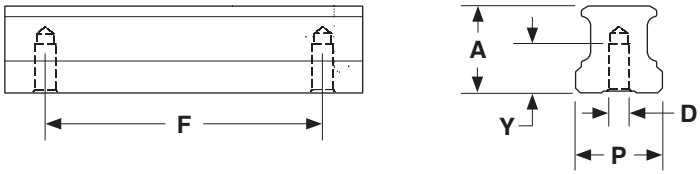

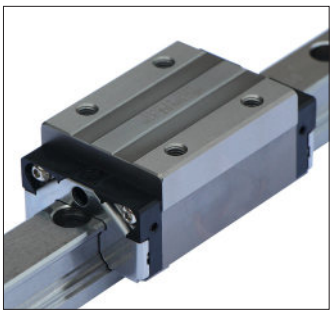

* Heavy Load Profile Bearing Blocks
* Alloy steel bearing, rail, and balls
* Equal loading in all directions
* 4 rows of re-circulating balls
* Standard & long block
* Standard and flanged block
* 5 Different accuracy ranges
* 3 Different preload values
* 3 Different block seal options
* Any rail cut to specific length
* *Optional* - Tapped bottom rail
* *Optional* - Self lube reservoir
* *Optional* - Ball chain block
* *Optional* - Metal Scraper on block

HRC U 15 M N S Z C V1 H - 2 - 1260 - 30 - 30

Series Type

HRC - Heavy Load Profile Rail

Rail Type

- Standard **U** - Tapped from Bottom

Profile Size

15 - 15 mm **30** - 30 mm
20 - 20 mm **35** - 35 mm
25 - 25 mm **45** - 45 mm
55 - 55 mm

Block Width

M - Standard **F** - Flanged

Block Length

N - Standard **L** - Long

Block Seals

S - Standard **B** - Low Friction **SN** - Metal Scraper

Block Lube

- None **Z** - Lubrication Pad

Block Bearings

- Standard **C** - Ball Chain

Preload Class

V0 - Light **V1** - Medium **V2** - Heavy

Accuracy Grade

N - Normal **H** - High **P** - Precision **SP** - Super Precision
UP - Ultra Precision

Number of Blocks

2 - Number of blocks on each rail

Rail Length

xxxx - Overall rail length (mm)

Start Hole

xx - Distance from end (mm)

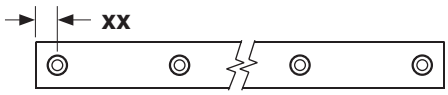

End Hole

xx - Distance from end (mm)

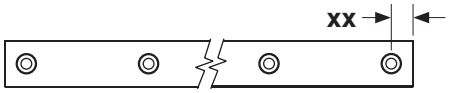

Specifications subject to change without notice

Load Capacities - HRC series

Model Number	Dynamic Load Capacity C_{50} (kN @ 50 km)		Static Load Capacity C_0 (kN)		Static Moment Loads					
					M_r (Nm)		M_p (Nm)		M_y (Nm)	
	Standard	with Ball Chain	Standard	with Ball Chain	Standard	with Ball Chain	Standard	with Ball Chain	Standard	with Ball Chain
HRC 15 MN HRC 15 FN	12.5	14.9	17.5	16.2	140	130	105	95	105	95
HRC 15 ML HRC 15 FL	16.9	19.6	26.9	24.3	215	195	235	215	235	215
HRC 20 MN HRC 20 FN	21.5	25.6	30.0	25.7	325	275	230	200	230	200
HRC 20 ML HRC 20 FL	25.7	34.1	38.5	34.3	415	370	390	350	390	350
HRC 25 MN HRC 25 FN	31.2	36.2	42.5	36.4	540	465	385	340	385	340
HRC 25 ML HRC 25 FL	38.7	50.4	57.7	51.6	735	655	710	640	710	640
HRC 30 MN HRC 30 FN	41.3	49.4	53.7	49.6	845	780	565	530	565	530
HRC 30 ML HRC 30 FL	49.9	65.8	70.2	66.1	1105	1040	950	900	950	900
HRC 35 MN HRC 35 FN	57.8	69.9	82.9	70.2	1700	1575	1080	1010	1080	1010
HRC 35 ML HRC 35 FL	68.9	94.4	106.5	94.7	2185	1940	1755	1575	1755	1575
HRC 45 MN HRC 45 FN	89.8	102.5	122.1	102.8	3200	2955	1910	1775	1910	1775
HRC 45 ML HRC 45 FL	112.8	159.4	169.1	159.7	4430	4185	3460	3280	3460	3280
HRC 55 MN HRC 55 FN	161.3	N.A.	186.0	N.A.	4949	N.A.	3278	N.A.	3278	N.A.
HRC 55 ML HRC 55 FL	185.2	N.A.	226.0	N.A.	6472	N.A.	5284	N.A.	5284	N.A.

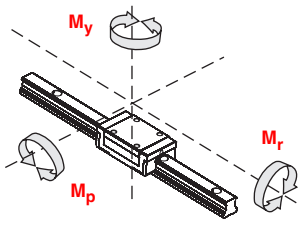

N.A. - Not Available

Dimensions & Specifications

Model Number	Outline (mm)			Block Dimensions (mm)								Rail Dimensions (mm)					Weight	
	Height H	Width W	Length L	B	C	M x T	K	G	N	J	E	P	X	A	F	Q x R x S	Block (kg)	Rail (kg/m)
HRC 15 MN HRC 15 ML	28	34	55.5 76.2	26	26 26	M4 x 7	24.7	40.3 61	M3 x 6.5	8.5	5.3	15	9.5	15	60	4.5 x 7.5 x 5.3	0.20 0.40	1.29
HRC 20 MN HRC 20 ML	30	44	69 87.2	32	36 50	M5 x 8.5	25	52 70.2	M3 x 7.5	6	10	20	12	20	60	6 x 9.5 x 8.5	0.32 0.40	2.28
HRC 25 MN HRC 25 ML	40	48	81.2 105	35	35 50	M6 x 9	34	62.2 86	M6 x 7.5	12	12	23	12.5	23	60	7 x 11 x 9	0.58 0.69	3.02
HRC 30 MN HRC 30 ML	45	60	95.5 118	40	40 60	M8 x 12	38.2	71.5 94	M6 x 8.5	10.5	12	28	16	27	80	9 x 14 x 12	0.90 1.15	4.38
HRC 35 MN HRC 35 ML	55	70	111.2 136.6	50	50 72	M8 x 13	47.4	86.2 111.6	M6 x 10	15	12	34	18	32	80	9 x 14 x 12	1.43 1.95	6.79
HRC 45 MN HRC 45 ML	70	86	135.5 171.5	60	60 80	M10 x 20	60.7	102.5 138.5	PT1/8 x 12.5	21.1	14	45	20.5	39	105	14 x 20 x 17	2.79 4.06	10.53
HRC 55 MN HRC 55 ML	80	100	168.5 202	75	75 95	M12 x 25	68	126.5 160	M6 x 10	23.5	12	53	23.5	45.7	120	16 x 24 x 20	5.11 6.24	14.0

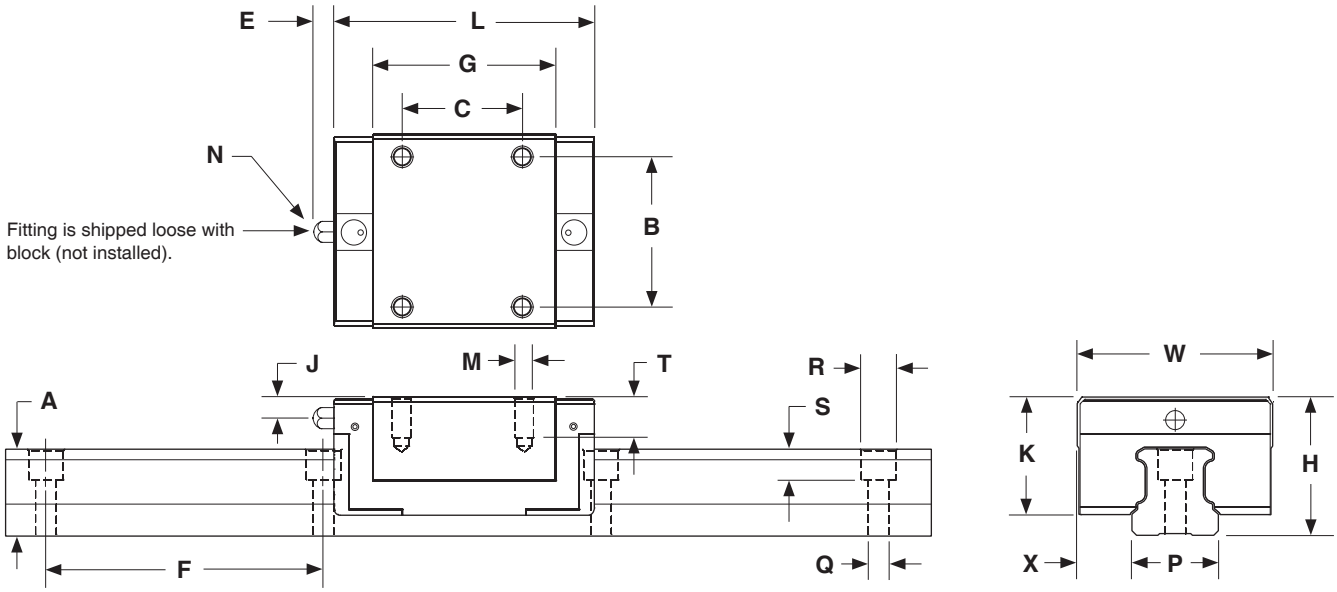

Rail Size	(mm) D x Y	P	A	F
HRCU 15	M5 x 8	15	15	60
HRCU 20	M6 x 10	20	20	60
HRCU 25	M6 x 12	23	23	60
HRCU 30	M8 x 15	28	27	80
HRCU 35	M8 x 15	34	32	80
HRCU 45	M12 x 19	45	39	105
HRCU 55	M14 x 24	53	45.7	120

Rail Tapped from Bottom

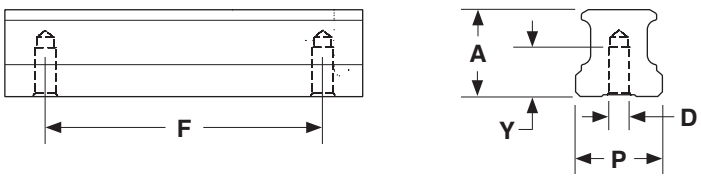

Specifications subject to change without notice

Dimensions & Specifications

Model Number	Outline (mm)			Block Dimensions (mm)									Rail Dimensions (mm)					Weight	
	Height H	Width W	Length L	B	C	M x T	V	K	G	N	J	E	P	X	A	F	Q x R x S	Block (kg)	Rail (kg/m)
HRC 15 FN HRC 15 FL	24	47	55.5 76.2	38	30	M5 x 7	M4	20.7	40.3 61	M3 x 6.5	4.5	5.3	15	16	15	60	4.5 x 7.5 x 5.3	0.19 0.29	1.29
HRC 20 FN HRC 20 FL	30	63	69 87.2	53	40	M6 x 10	M5	25	52 70.2	M3 x 7.5	6	10	20	21.5	20	60	6 x 9.5 x 8.5	0.40 0.51	2.28
HRC 25 FN HRC 25 FL	36	70	81.2 105	57	45	M8 x 10	M6	30	62.2 86	M6 x 7.5	8	12	23	23.5	23	60	7 x 11 x 9	0.63 0.87	3.02
HRC 30 FN HRC 30 FL	42	90	95.5 118	72	52	M10 x 12	M8	35.2	71.5 94	M6 x 8.5	7.5	12	28	31	27	80	9 x 14 x 12	1.11 1.39	4.38
HRC 35 FN HRC 35 FL	48	100	111.2 136.6	82	62	M10 x 13	M8	40.4	86.2 111.6	M6 x 10	8	12	34	33	32	80	9 x 14 x 12	1.55 2.00	6.79
HRC 45 FN HRC 45 FL	60	120	135.5 171.5	100	80	M12 x 15	M10	50.7	102.5 138.5	PT1/8 x 12.5	11.1	14	45	37.5	39	105	14 x 20 x 17	2.75 4.28	10.53
HRC 55 FN HRC 55 FL	70	140	168.5 202	116	95	M14 x 18	M12	58	126.5 160	M6 x 10	13.5	12	53	43.5	45.7	120	16 x 24 x 20	5.44 6.96	14.0

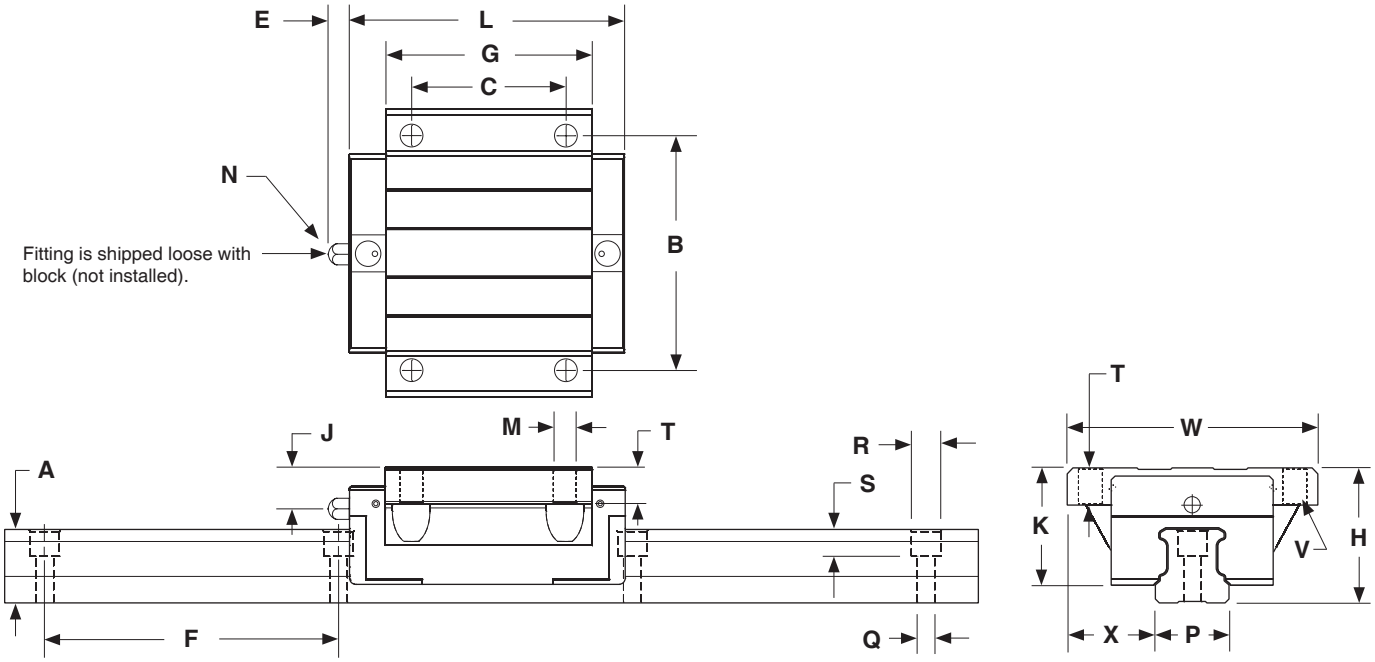

Rail Size	(mm) D x Y	P	A	F
HRCU 15	M5 x 8	15	15	60
HRCU 20	M6 x 10	20	20	60
HRCU 25	M6 x 12	23	23	60
HRCU 30	M8 x 15	28	27	80
HRCU 35	M8 x 15	34	32	80
HRCU 45	M12 x 19	45	39	105
HRCU 55	M14 x 24	53	45.7	120

Rail Tapped from Bottom

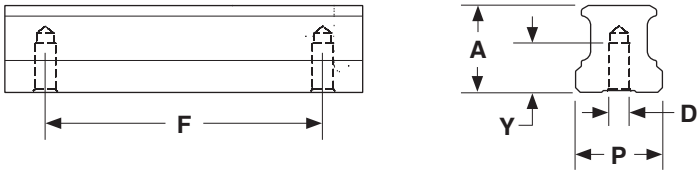

Specifications subject to change without notice

* Wide Rail Profile Bearing Blocks
* Alloy steel bearing, rail, and balls
* Equal loading in all directions
* 4 rows of re-circulating balls
* Standard & long block
* Standard and flanged block
* 5 Different accuracy ranges
* 3 Different preload values
* 2 Different block seal options
* Any rail cut to specific length
* *Optional* - Tapped bottom rail
* *Optional* - Ball chain block

WRC U 21/15 M N S C V1 H - 2 - 1260 - 30 - 30

Series Type
WRC - Wide Profile Rail

Rail Type
- Standard U - Tapped from Bottom

Profile Size
21/15 27/20

Block Width
M - Standard F - Flanged

Block Length
N - Standard

Block Seals
B - Low Friction

Block Bearings
- Standard C - Ball Chain

Preload Class
V0 - Light V1 - Medium V2 - Heavy

Accuracy Grade
N - Normal H - High P - Precision SP - Super Precision UP - Ultra Precision

Number of Blocks
2 - Number of blocks on each rail

Rail Length
xxxx - Overall rail length (mm)

Start Hole
xx - Distance from end (mm)

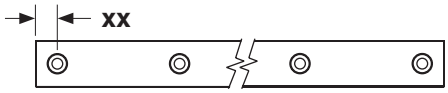

End Hole
xx - Distance from end (mm)

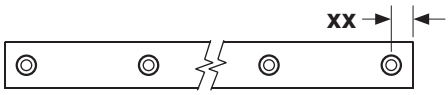

Load Capacities - WRC series

Model Number	Dynamic Load Capacity C_{50} (kN @ 50 km)		Static Load Capacity C_0 (kN)		Static Moment Loads					
					M_r (Nm)		M_p (Nm)		M_y (Nm)	
	Standard	with Ball Chain	Standard	with Ball Chain	Standard	with Ball Chain	Standard	with Ball Chain	Standard	with Ball Chain
WRC 21/15 MN & FN	12.5	14.9	17.5	16.2	315	295	105	95	105	95
WRC 27/20 MN & FN	21.5	28.1	30.0	25.7	634	535	230	200	230	200

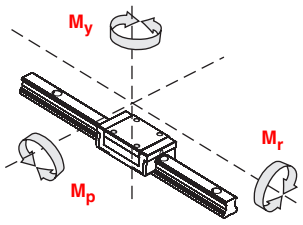

Dimensions & Specifications

Model Number	Outline (mm)			Block Dimensions (mm)									Rail Dimensions (mm)						Weight	
	Height H	Width W	Length L	B	C	M x T	K	G	Z	N	J	E	P	V	X	A	F	Q x R x S	Block (kg)	Rail (kg/m)
WRC 21/15 MN	21	54	57.5	31	19	M5 x 5	18.3	40.3	6	M3 x 6.5	3.3	5.3	37	22	8.5	14.4	50	4.5 x 7.5 x 5.3	0.16	3.60
WRC 27/20 MN	27	62	70	46	32	M6 x 6	23.5	52	10	M3 x 7.5	4.5	5.3	42	24	10	18.5	60	4.5 x 7.5 x 5.3	0.32	5.26

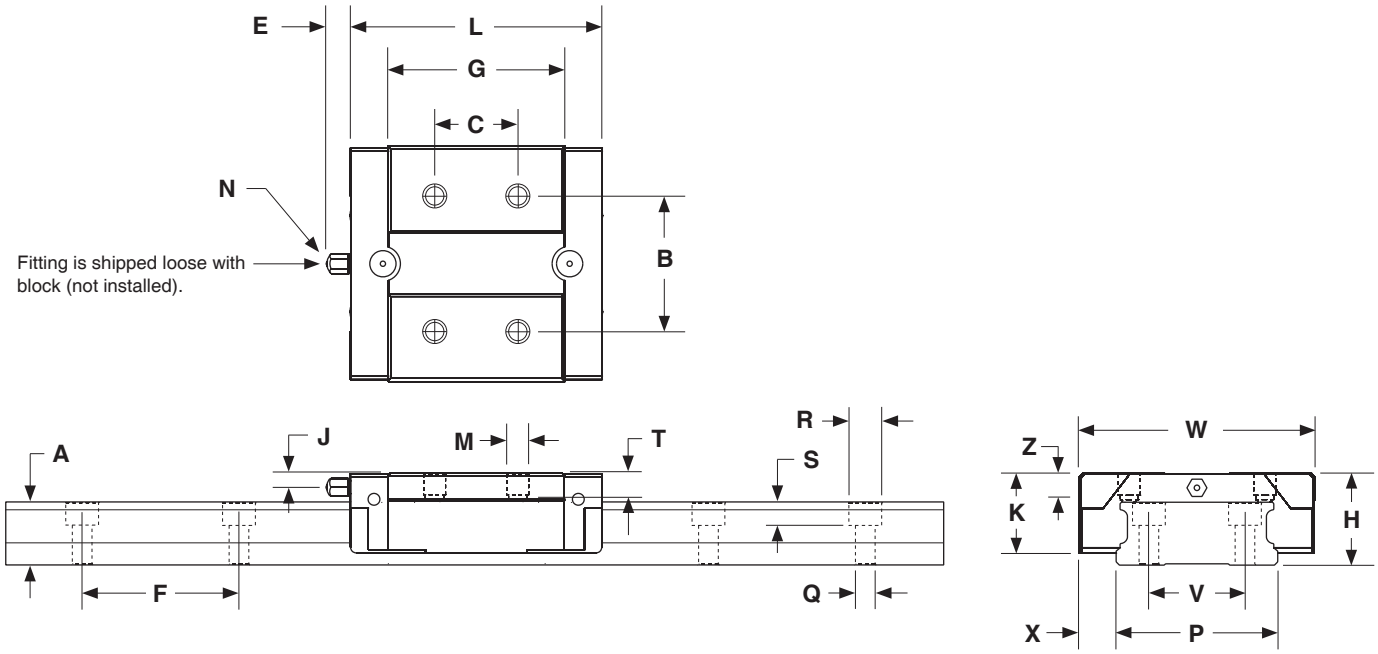

Rail Size	(mm)				
	D x Y	P	A	F	U
WRCU 21/15	M4 x 8	37	14.4	50	22
WRCU 27/20	M5 x 7.5	42	18.5	60	24

Rail Tapped from Bottom

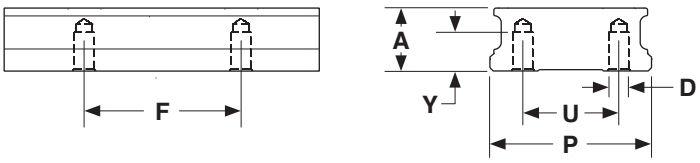

Specifications subject to change without notice

Dimensions & Specifications

Model Number	Outline (mm)			Block Dimensions (mm)									Rail Dimensions (mm)						Weight	
	Height H	Width W	Length L	B	C	M x T	K	G	Z	N	J	E	P	V	X	A	F	Q x R x S	Block (kg)	Rail (kg/m)
WRC 21/15 FN	21	68	57.5	60	29	M5 x 7	18.3	40.3	7	M3 x 6.5	3.3	3.5	37	22	15.5	14.4	50	4.5 x 7.5 x 5.3	0.20	3.60
WRC 27/20 FN	27	80	70	70	40	M6 x 9	23.5	52	9	M3 x 7.5	4.5	3.5	42	24	19	18.5	60	4.5 x 7.5 x 5.3	0.55	5.26

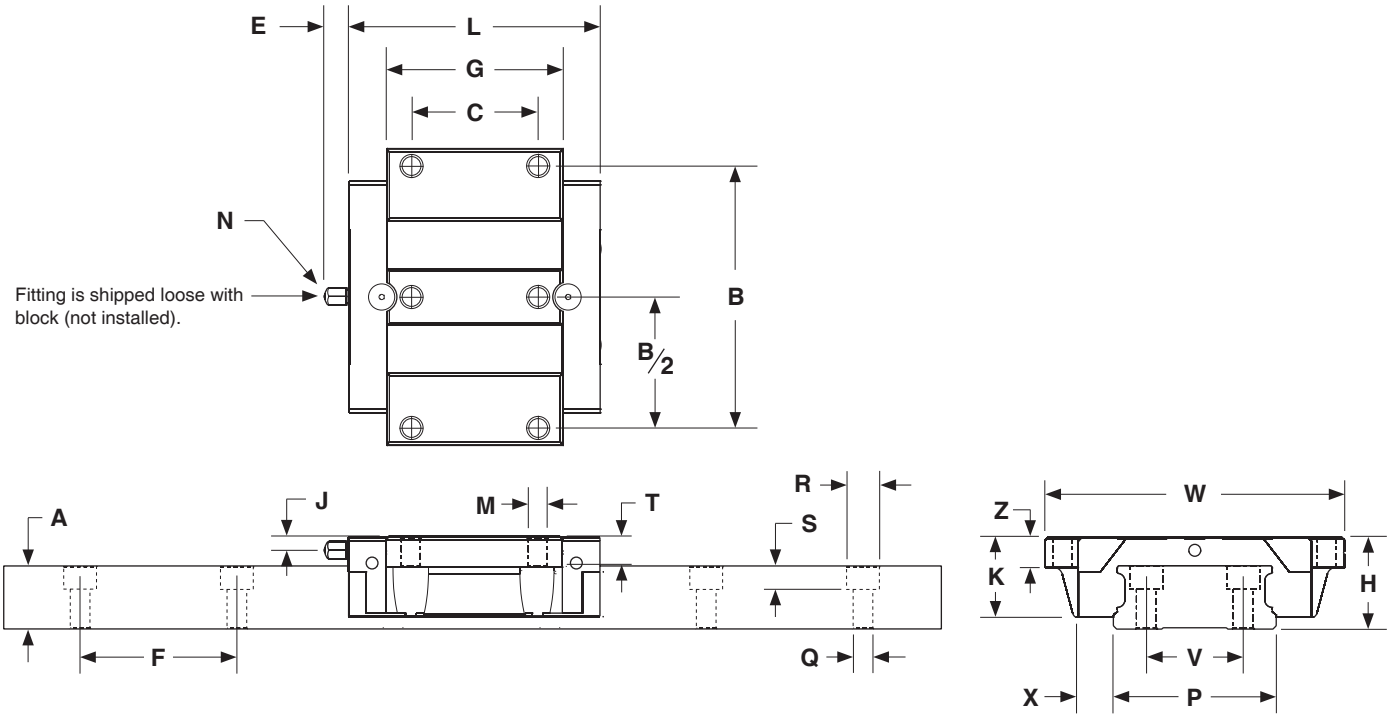

Rail Size	(mm)				
	D x Y	P	A	F	U
WRCU 21/15	M4 x 8	37	14.4	50	22
WRCU 27/20	M5 x 7.5	42	18.5	60	24

Rail Tapped from Bottom

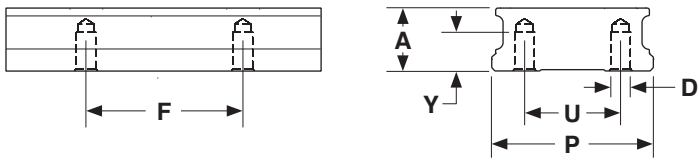

* Wide Rail Profile Bearing Blocks
* Alloy steel bearing, rail, and balls
* Equal loading in all directions
* 4 rows of re-circulating balls
* Standard, long & extra long block
* Standard and flanged block
* 4 Different accuracy ranges
* 3 Different preload values
* Standard seal option
* Any rail cut to specific length
* *Optional* - Tapped bottom rail
* *Optional* - Ball chain block

ARR U 35 M N S C V1 H - 2 - 1260 - 30 - 30

Series Type

ARR - Standard Height Roller Linear Guide
HRR - High Profile Roller Linear Guide
LRR - Low Profile Roller Linear Guide

Rail Type

- Standard **U** - Tapped from bottom

Profile Size

35 - 35 mm **45** - 45 mm

Block Width

M - Standard **F** - Flanged

Block Length

N - Standard **L** - Long **XL** - Extra Long

Block Seals

S - Standard

Block Bearings

- Standard **C** - Ball Chain

Preload Class

V0 - Light **V1** - Medium **V2** - Heavy

Accuracy Grade

H - High **P** - Precision **SP** - Super Precision **UP** - Ultra Precision

Number of Blocks

2 - Number of blocks on each rail

Rail Length

xxxx - Overall rail length (mm)

Start Hole

xx - Distance from end (mm)

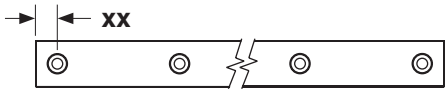

End Hole

xx - Distance from end (mm)

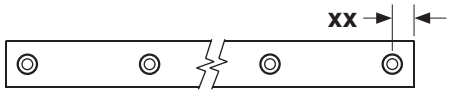

Specifications subject to change without notice

Load Capacities - ARR & HRR & LRR series

Model Number	Dynamic Load Capacity C_{50} (kN @ 50 km)		Static Load Capacity C_0 (kN)		Static Moment Loads M_r (Nm)		M_p (Nm)		M_y (Nm)	
	Standard	with Ball Chain	Standard	with Ball Chain	Standard	with Ball Chain	Standard	with Ball Chain	Standard	with Ball Chain
ARR 35 MN HRR 35 MN LRR 35 MN HRR 35 FN LRR 35 FN	71.8	89.8	154	133	2742	2350	1946	1710	1946	1710
ARR 35 ML HRR 35 ML LRR 35 ML HRR 35 FL LRR 35 FL	86.6	108.4	196	175	3525	3133	3226	2881	3226	2881
HRR 35 MXL LRR 35 MXL HRR 35 FXL LRR 35 FXL	103.3	129.1	245	224	4439	4047	5111	4695	5111	4695
ARR 45 MN HRR 45 MN LRR 45 MN HRR 45 FN LRR 45 FN	120.8	151.2	255	222	6350	5750	4450	4050	4450	4050
ARR 45 ML HRR 45 ML LRR 45 ML HRR 45 FL LRR 45 FL	148.6	185.8	333	288	8450	7550	7700	6900	7700	6900
HRR 45 MXL LRR 45 MXL HRR 45 FXL LRR 45 FXL	173.9	217.3	410	366	10500	9650	11800	10850	11800	10850

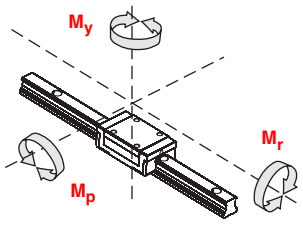

Dimensions & Specifications

Model Number	Outline (mm)			Block Dimensions (mm)											Rail Dimensions (mm)					Weight	
	Height H	Width W	Length L	B	C	M x T	K	G	N	J	E	O	Z	V	P	X	A	F	Q x R x S	Block (kg)	Rail (kg/m)
ARR 35 MN	48	70	122	50	50	M8 x 13	42	84	M6 x 12	10	12	M6 x 8	16.4	11	34	18	31	40	9 x 14 x 17	1.20	5.74
ARR 35 ML			147.5		72			109.5												1.75	
ARR 45 MN	60	86	156	60	60	M10 x 17	52	110	M6 x 12	14.6	12	M6 x 8	21.8	11	45	20.5	38	52.5	14 x 20 x 17	2.60	10.0
ARR 45 ML			191		80			145												3.35	

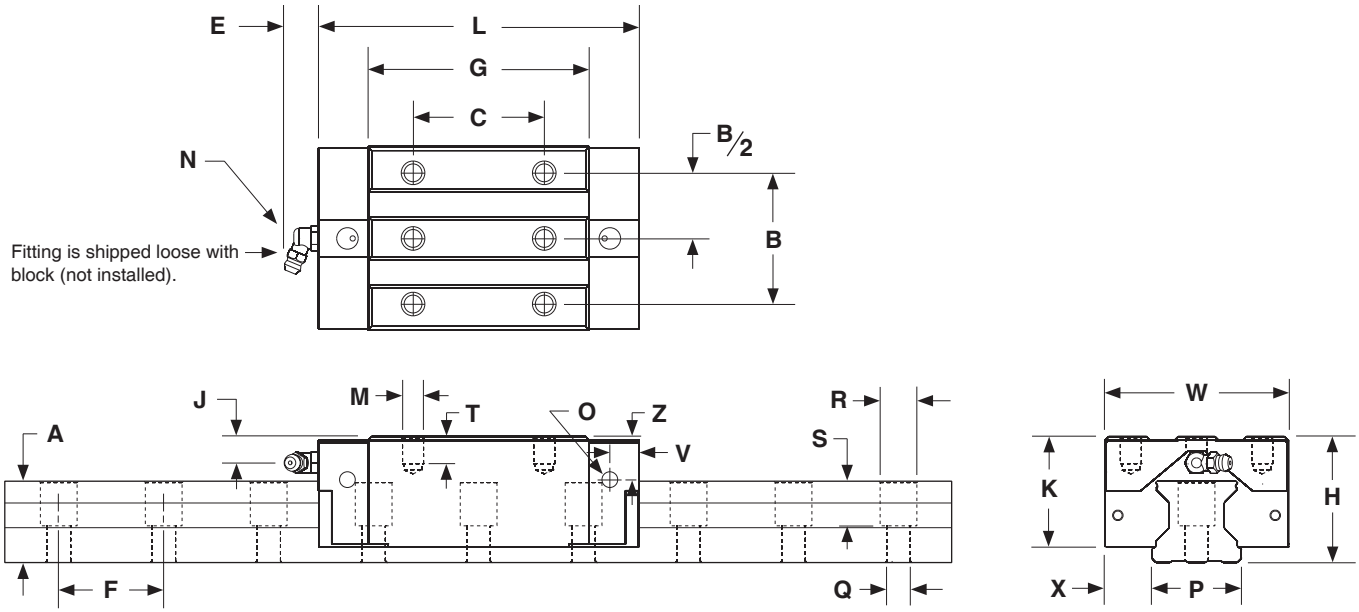

Rail Size	(mm)			
	D x Y	P	A	F
ARRU 35	M8 x 15	34	31	40
ARRU 45	M12 x 19	45	38	52.5

Rail Tapped from Bottom

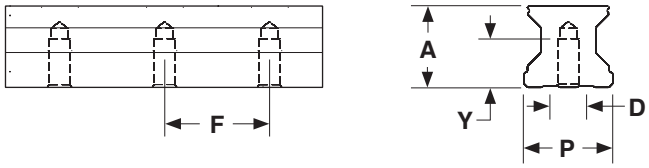

Specifications subject to change without notice

Dimensions & Specifications

Model Number	Outline (mm)			Block Dimensions (mm)											Rail Dimensions (mm)					Weight	
	Height H	Width W	Length L	B	C	M x T	K	G	N	J	E	O	Z	V	P	X	A	F	Q x R x S	Block (kg)	Rail (kg/m)
HRR 35 MN			122		50			84												1.72	
HRR 35 ML	55	70	147.5	50	72	M8 x 16	49	109.5	M6 x 12	17	12	M6 x 8	23.4	11	34	18	31	40	9 x 14 x 17	2.1	5.74
HRR 35 MXL			177.5		100			139.5												2.7	
HRR 45 MN			156		60			110												3.4	
HRR 45 ML	70	86	191	60	80	M10 x 20	62	145	M6 x 12	24.6	12	M6 x 8	31.8	11	45	20.5	38	52.5	14 x 20 x 17	4.3	10.0
HRR 45 MXL			226		120			180												5.2	

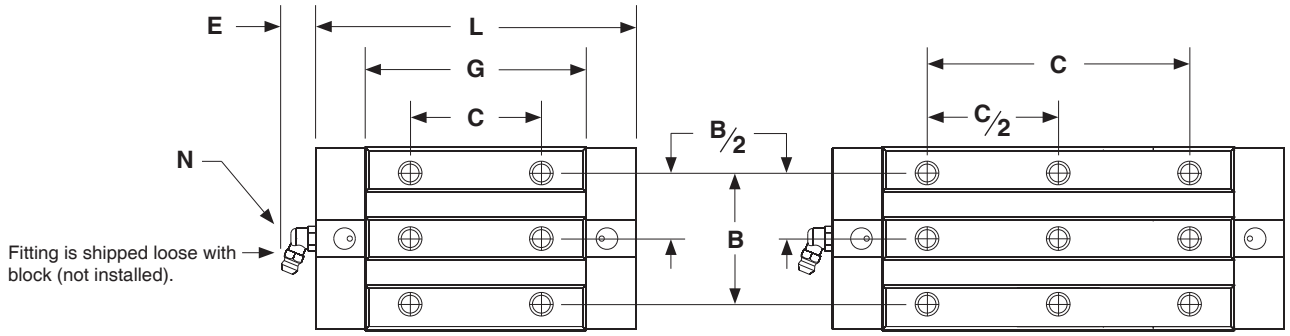

MN / ML version

MXL version

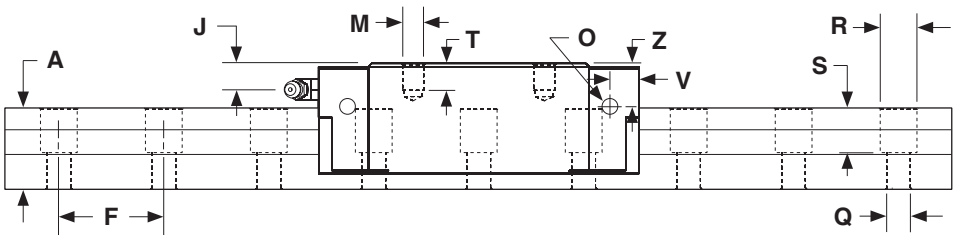

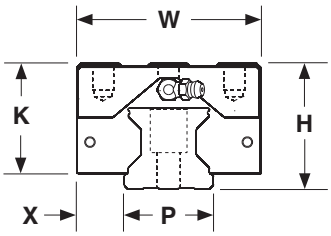

Rail Size	(mm)			
	D x Y	P	A	F
HRRU 35	M8 x 15	34	31	40
HRRU 45	M12 x 19	45	38	52.5

Rail Tapped from Bottom

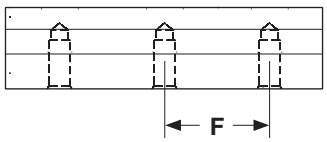

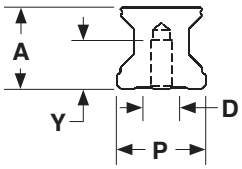

Specifications subject to change without notice

Dimensions & Specifications

Model Number	Outline (mm)			Block Dimensions (mm)													Rail Dimensions (mm)				
	Height H	Width W	Length L	B	C	U	M x T	M_1 x T_1	K	G	N	J	E	O	Z	V	P	X	A	F	Q x R x S
HRR 35 FN			122		52	62				84											
HRR 35 FL	48	100	147.5	82	52	62	M8 x 13	M10 x 13	42	109.5	M6 x 12	10	12	M6 x 8	16.4	11	34	33	31	40	9 x 14 x 17
HRR 35 FXL			177.5		100					139.5											
HRR 45 FN			156		60	80				110											
HRR 45 FL	60	120	191	100	60	80	M10 x 15	M12 x 15	52	145	M6 x 12	14.6	12	M6 x 8	21.8	11	45	37.5	38	52.5	14 x 20 x 17
HRR 45 FXL			226		120					180											

Model Number	Weight Block (kg)	Weight Rail (kg/m)
HRR 35 FN	1.7	
HRR 35 FL	2.4	5.74
HRR 35 FXL	3.1	

Model Number	Weight Block (kg)	Weight Rail (kg/m)
HRR 45 FN	3.6	
HRR 45 FL	4.7	10.0
HRR 45 FXL	5.75	

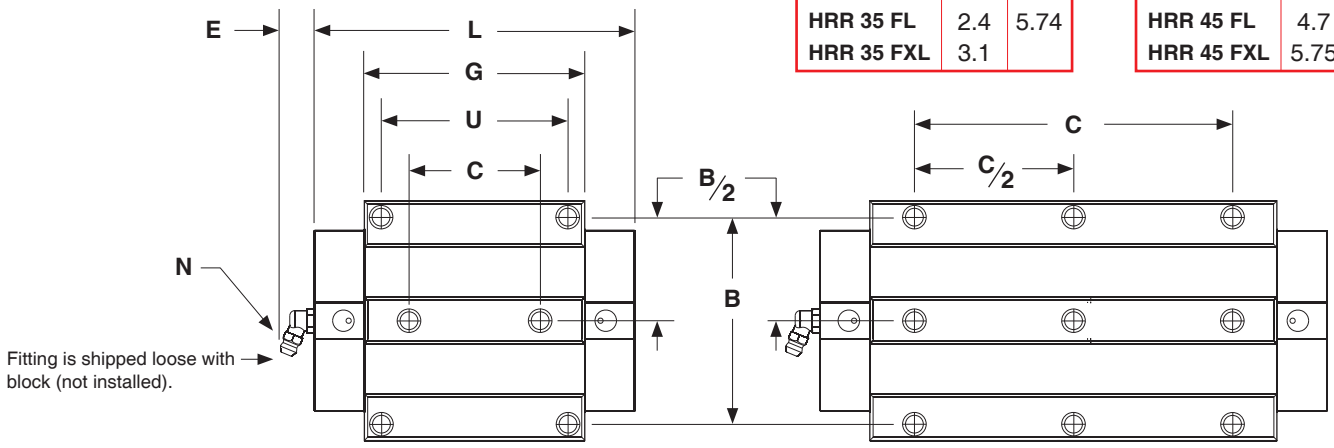

FN / FL version

FXL version

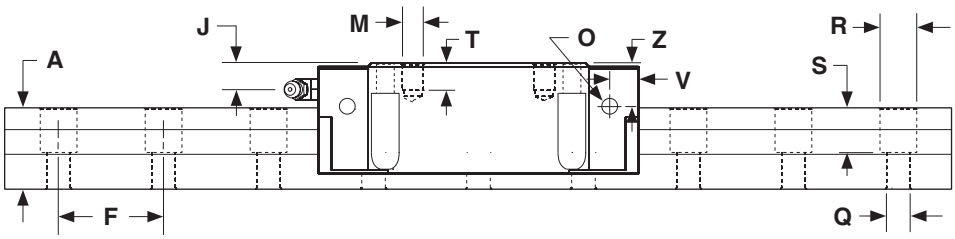

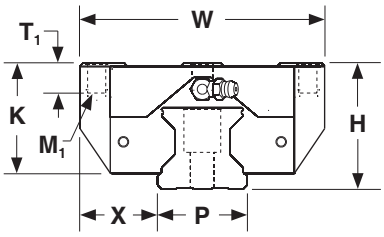

Rail Size	(mm) D x Y	P	A	F
HRRU 35	M8 x 15	34	31	40
HRRU 45	M12 x 19	45	38	52.5

Rail Tapped from Bottom

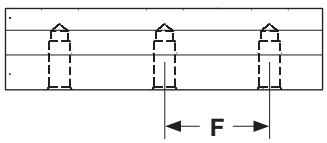

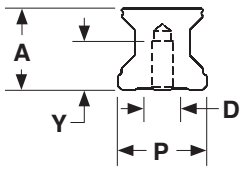

Dimensions & Specifications

Model Number	Outline (mm)			Block Dimensions (mm)											Rail Dimensions (mm)					Weight	
	Height H	Width W	Length L	B	C	M x T	K	G	N	J	E	O	Z	V	P	X	A	F	Q x R x S	Block (kg)	Rail (kg/m)
LRR 35 MN			122		50			84												1.1	
LRR 35 ML	44	70	147.5	50	72	M8 x 9	38	109.5	M6 x 12	6	12	M6 x 8	12.4	11	34	18	31	40	9 x 14 x 17	1.5	5.74
LRR 35 MXL			177.5		100			139.5												1.9	
LRR 45 MN			156		60			110												2.1	
LRR 45 ML	52	86	191	60	80	M10 x 11	44	145	M6 x 12	6.6	12	M6 x 8	13.8	11	45	20.5	38	52.5	14 x 20 x 17	2.7	10.0
LRR 45 MXL			226		120			180												3.2	

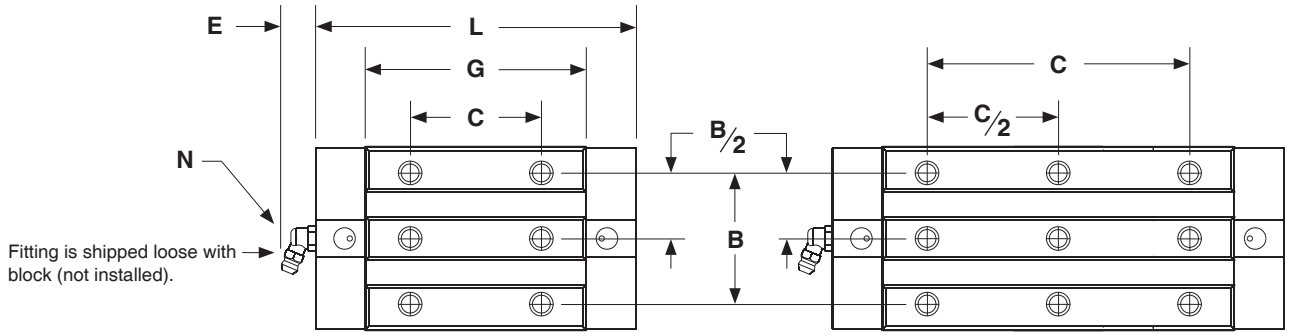

MN / ML version

MXL version

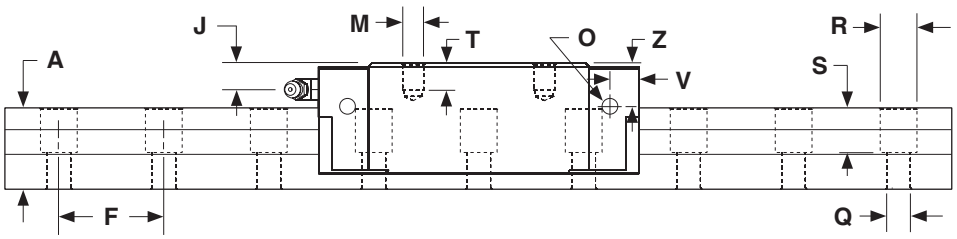

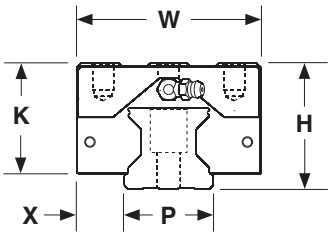

Rail Size	(mm)			
	D x Y	P	A	F
LRRU 35	M8 x 15	34	31	40
LRRU 45	M12 x 19	45	38	52.5

Rail Tapped from Bottom

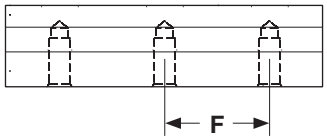

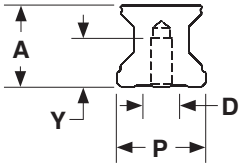

Specifications subject to change without notice

Dimensions & Specifications

Model Number	Outline (mm)			Block Dimensions (mm)													Rail Dimensions (mm)				
	Height H	Width W	Length L	B	C	U	M x T	M_1 x T_1	K	G	N	J	E	O	Z	V	P	X	A	F	Q x R x S
LRR 35 FN			122		52	62				84											
LRR 35 FL	44	100	147.5	82	52	62	M8 x 9	M10 x 13	38	109.5	M6 x 12	6	12	M6 x 8	12.4	11	34	33	31	40	9 x 14 x 17
LRR 35 FXL			177.5		100					139.5											
LRR 45 FN			156		60	80				110											
LRR 45 FL	52	120	191	100	60	80	M10 x 10	M12 x 15	44	145	M6 x 12	6.6	12	M6 x 8	13.8	11	45	37.5	38	52.5	14 x 20 x 17
LRR 45 FXL			226		120					180											

Model Number	Weight Block (kg)	Weight Rail (kg/m)
LRR 35 FN	1.55	
LRR 35 FL	2.2	5.74
LRR 35 FXL	2.8	

Model Number	Weight Block (kg)	Weight Rail (kg/m)
LRR 45 FN	2.9	
LRR 45 FL	3.8	10.0
LRR 45 FXL	4.5	

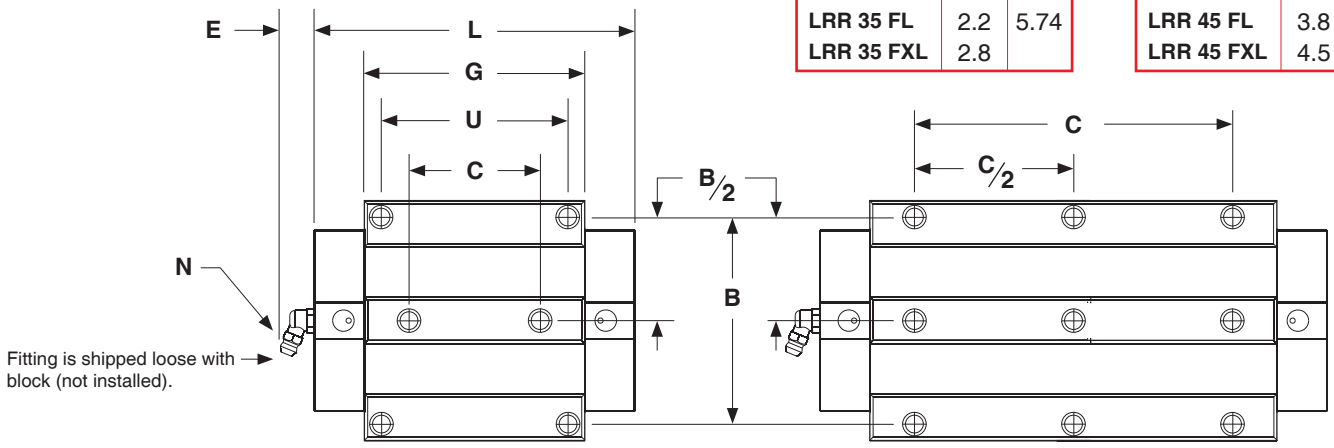

FN / FL version

FXL version

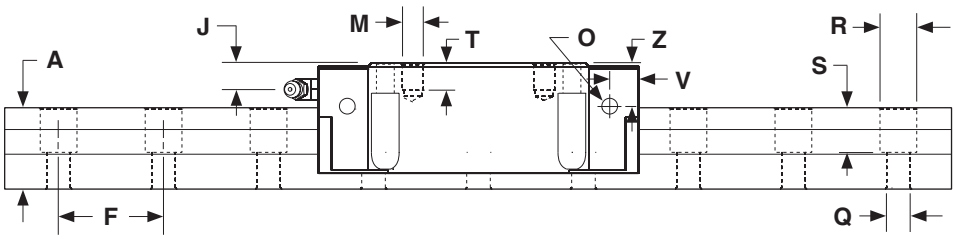

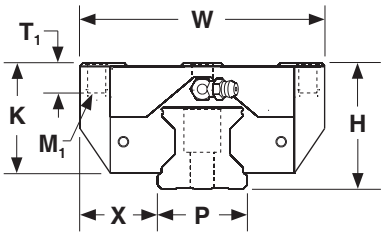

Rail Size	(mm) D x Y	P	A	F
LRRU 35	M8 x 15	34	31	40
LRRU 45	M12 x 19	45	38	52.5

Rail Tapped from Bottom

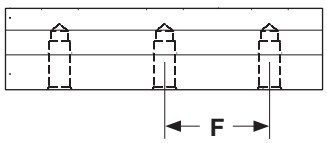

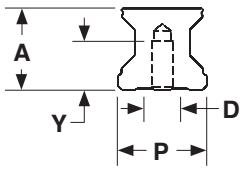

Unit Conversions

Torque Conversions

Present Units	Convert To	Multiply By
Gram-centimeters	newton-meters	0.0000981
Gram-centimeters	ounce-inches	0.0138874
Gram-centimeters	pound-inches	0.000868
Gram-centimeters	pound-feet	0.0000723
Newton-meters	gram-centimeters	10,197.162
Newton-meters	ounce-inches	141.612
Newton-meters	pound-inches	8.85
Newton-meters	pound-feet	0.73756
Ounce-inches	gram-centimeters	72.0077
Ounce-inches	newton-meters	0.007062
Ounce-inches	pound-inches	0.0625
Ounce-inches	pound-feet	0.005208
Pound-inches	gram-centimeters	1,152.0
Pound-inches	newton-meters	0.11299
Pound-inches	ounce-inches	16.0
Pound-inches	pound-feet	0.08333
Pound-feet	gram-centimeters	13,825.5
Pound-feet	newton-meters	1.3558
Pound-feet	ounce-inches	192.0
Pound-feet	pound-inches	12.0

Distance Conversions

Present Units	Convert To	Multiply By
Arc-minutes	degrees	0.016666
Arc-seconds	degrees	0.000277
Centimeters	inches	0.3937
Centimeters	feet	0.03280
Centimeters	microns	10,000.0
Degrees	arc-minutes	60.0
Degrees	arc-seconds	3,600.0
Degrees	radians	0.017453
Feet	centimeters	30.48
Feet	meters	0.3048
Inches	centimeters	2.54
Inches	Km	0.0000254
Inches	meters	0.0254
Inches	microns	25,400.0
Inches	millimeters	25.4
Km	inches	39,370.0
Meters	feet	3.2808
Meters	inches	39.37
Meters	microns	1,000,000.0
Microns	centimeters	0.0001
Microns	inches	0.00003937
Microns	meters	0.000001
Microns	millimeters	0.001
Millimeters	inches	0.03937
Millimeters	microns	1,000.0
Radians	degrees	57.295779

Reference : *Handbook of Tables for Applied Engineering Science*

Inertia Conversions

Present Units	Convert To	Multiply By
Gram-cm^2	ounce-inches^2	0.00546745
Gram-cm^2	ounce-inch-sec^2	0.000014161
Gram-cm^2	pound-inches^2	0.000341716
Gram-cm^2	pound-inch-sec^2	0.000000885
Gram-cm^2	pound-feet-sec^2	0.000000074
Ounce-inches^2	gram-cm^2	182.901
Ounce-inches^2	ounce-inch-sec^2	0.00259008
Ounce-inches^2	pound-inches^2	0.0625
Ounce-inches^2	pound-inch-sec^2	0.00016188
Ounce-inches^2	pound-feet-sec^2	0.00001349
Ounce-inch-sec^2	gram-cm^2	70,615.4
Ounce-inch-sec^2	ounce-inches^2	386.0
Ounce-inch-sec^2	pound-inches^2	24.13045
Ounce-inch-sec^2	pound-inch-sec^2	0.0625
Ounce-inch-sec^2	pound-feet-sec^2	0.00520833
Pound-inches^2	gram-cm^2	2,926.41
Pound-inches^2	ounce-inches^2	16.0
Pound-inches^2	ounce-inch-sec^2	0.0414413
Pound-inches^2	pound-inch-sec^2	0.00259008
Pound-inches^2	pound-feet-sec^2	0.00021584
Pound-inch-sec^2	gram-cm^2	1,129,850.0
Pound-inch-sec^2	ounce-inches^2	6,177.4
Pound-inch-sec^2	ounce-inch-sec^2	16.0
Pound-inch-sec^2	pound-inches^2	386.0
Pound-inch-sec^2	pound-feet-sec^2	0.0833333
Pound-feet-sec^2	gram-cm^2	13,558,200.0
Pound-feet-sec^2	ounce-inches^2	74,128.9
Pound-feet-sec^2	ounce-inch-sec^2	192.0
Pound-feet-sec^2	pound-inches^2	4,633.06
Pound-feet-sec^2	pound-inch-sec^2	12.0

Load Conversions

Present Units	Convert To	Multiply By
Grams	newtons	0.009806
Grams	ounces	0.03528
Grams	pounds	0.002204
Kilograms	pounds	2.2046
Newtons	grams	101.971
Newtons	ounces	3.59692
Newtons	pounds	0.224808
Ounces	grams	28.3495
Ounces	newtons	0.27802
Ounces	pounds	0.0625
Pounds	grams	453.592
Pounds	kilograms	0.45359
Pounds	newtons	4.44824
Pounds	ounces	16.0
Pounds	tons	0.0005
Tons	pounds	2,000.0

Terms of Sale

To Order

Any standard, or custom, product from LINTECH may be ordered by mail, email, on-line, phone, or fax from an Automation Specialist in your area. To obtain the name of your local Automation Specialist call:

All required options should be reviewed using the part numbering guide for each model series. Your local Automation Specialist or factory personnel can assist you with any questions you may have.

Delivery

All shipping promises are made in good faith. Any shipping dates appearing on acknowledgments of orders or given to a customer in any other manner are approximate. Where the customer delays in supplying information necessary to proceeding with an order, the date of shipment may be extended accordingly. Standard products from LINTECH are usually available for delivery within 1 to 6 weeks of receipt of a purchase order. However, component shortages, labor disputes, or any other unforeseen circumstance may delay the delivery of an order. LINTECH shall not be held liable under any circumstance. All products are shipped F.O.B. Monrovia, CA. LINTECH packages all standard and custom products carefully. However, LINTECH is not liable for damage incurred during shipment. Contact the carrier immediately if damage to a package or shipment is noticed upon receipt of such shipment.

Payment Terms

Unless otherwise specified, payment shall be made by C.O.D, credit card (AMEX, Visa, or Master Card), or net thirty (30) days (pending credit approval) from date of shipment of the items purchased hereunder in U.S. currency. LINTECH reserves the right to require deposit payments on non-standard items, customs, or product built to Buyer's designs or specifications. Amounts not timely paid shall bear interest at the rate of 1.5% for each month or a portion thereof that Buyer is late in making payments. No responsibility is assumed by LINTECH for damages arising from delivery delays, fires, strikes, material shortages, accidents, or any other cause whatsoever, and purchase orders are accepted subject only to these conditions irrespective of statements or stipulations on purchase orders.

Minimum Order Amount

LINTECH requires a minimum of $30 List Price U.S. currency on all orders.

Warranty

All LINTECH products are guaranteed to be free from defects in material and workmanship, under normal use, for a period of one year after date of shipment. This warranty covers the repair or replacement of a product when it is sent prepaid to LINTECH. LINTECH does not assume liability for installation, abuse, alteration, insufficient application data provided for a design, or misuse of any positioning system. Products furnished by LINTECH, but not manufactured by LINTECH (motors, gearheads, encoders, amplifiers, etc....), are subject to the manufacturers standard warranty terms and conditions.

Returns

Any product requiring a return to LINTECH (for warranty or non-warranty repair) requires pre-approval from the factory prior to shipment. Contact the customer service department at (800) 435-7494 in order to obtain a RMA (Return Materials Authorization) number. At that time, please have your system Model & Serial numbers available, along with the reason for the return. The RMA number should be clearly marked on the returned package label and your packing list, or shipping document. Return product freight prepaid in its original package or one with comparable protection. LINTECH will not accept return shipments sent freight collect. Product damage incurred during return shipment, from poor packaging, will not be warranted by LINTECH. Keeping original packing materials is recommended until initial inspection and testing is completed.

Dimensions and Product Changes

Published dimensions shown in LINTECH catalogs are known to be accurate at time of printing. LINTECH shall not be held liable, under any circumstances, for any wrongly documented dimension or specification. Changes in design are made whenever LINTECH believes its products will improve by the change. No obligation to incorporate these changes in units manufactured prior to a change will be assumed.

Cancellations

All items entered for production and on which a cancellation is requested shall be paid for on the basis of actual cost of labor, materials, and supplies applied to the production of such items plus proper overhead expenses determined in accordance with good accounting practice, plus 25% of the total of such cost and expenses; provided that such cost and expense plus 25% shall in no case exceed 100% of the quoted price of original order. Upon cancellation, LINTECH may dispose of materials used in the manufacture of cancelled order as it sees fit.

Mechanical Motion Solutions

For over 50 years, LinTech® has designed and manufactured numerous standard and custom mechanical motion control products that are used in a wide range of applications and markets. This document highlights cut to length round rail precision shafting, round rail linear bearings (with or without pillow blocks), steel & aluminum shaft supports, shaft assemblies (single & TwinRail®), TwinRail® carriage assemblies, profile rail linear guides, rolled & ground ball screw assemblies, acme & ball screw driven actuators, belt driven slides, worm gear driven rotary tables, and a wide range of custom positioning assemblies.

LinTech®