# SCLG6 Series

## INTRODUCTION

- -Includes closed loop servo motor, servo amplifer and control
- -Independently programmable position, speed, acceleration, force, etc.
- -Easy to use; make a few 24 VDC connections and program in 15 minutes!
- -Program from handheld pendant or from PC
- -Virtually infinite positioning possible
- -Networkable up to 16 axes
- -DeviceNet and CC-Link gateways available
- -300-1,000mm stroke versions
- -Repeatability as good as ±0.01mm
- -300mm/sec max. speed
- -20kg max payload
- -20kgf and 30kgf thrust versions available

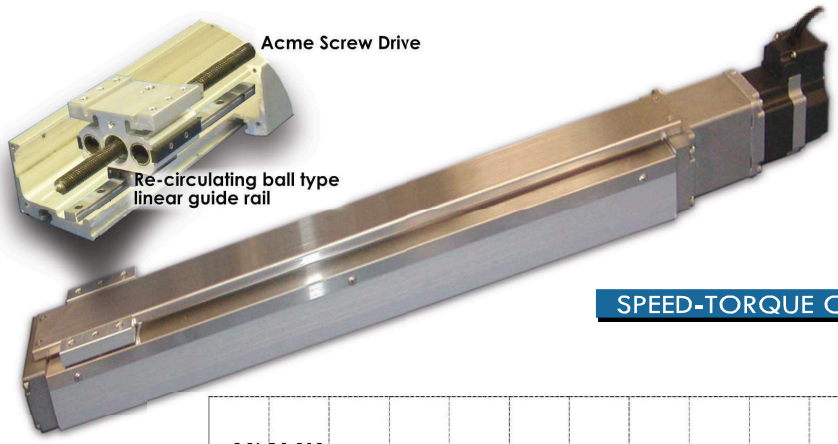


## SPEED-TORQUE CURVE

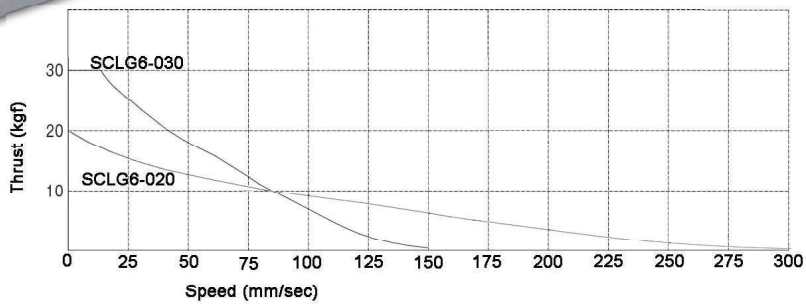


## SPECIFICATIONS

| MODEL | SCLG6-020- XXX -AB | | | | | | | SCLG6-030- XXX -AB | | | | | | |
|---|---|---|---|---|---|---|---|---|---|---|---|---|---|---|
| | 300 | 400 | 500 | 600 | 700 | 800 | 1000 | 300 | 400 | 500 | 600 | 700 | 800 | 1000 |
| Stroke (mm) | 300 | 400 | 500 | 600 | 700 | 800 | 1000 | 300 | 400 | 500 | 600 | 700 | 800 | 1000 |
| Max. Thrust (N)/(kgf) | 200 / 20.4 | | | | | | | 300 / 30.6 | | | | | | |
| Push mode max. Thrust (N)/(kgf) | 140 / 14.2 | | | | | | | 280 / 28.6 | | | | | | |
| Max. Speed (mm/s) * Typ. Data | 300 | | | | 280 | 220 | 150 | 150 | | | 140 | 110 | 75 | |
| Max. Load weight (kgf) | 20 | | | | | | | 20 | | | | | | |
| Max. vertical load (kgf) | 10 | | | | | | | 20 | | | | | | |
| Load moment (N-m / kg-fcm) | Mp= 6 / 60, My= 6/60, Mr= 10 /100 | | | | | | | | | | | | | |
| Max. axial thrust at power ON (N) | 25 | | | | | | | | | | | | | |
| Overhang length (mm) | 150 or shorter | | | | | | | | | | | | | |
| Actuator weight (kg) | 3.7 | 4.7 | 5.7 | 6.7 | 7.7 | 8.7 | 10.7 | 3.7 | 4.7 | 5.7 | 6.7 | 7.7 | 8.7 | 10.7 |
| Servo amplifier weight (kg) | 0.5 | | | | | | | | | | | | | |

## DIMENSIONS

| MODEL | Stroke | L | L1 |
|---|---|---|---|
| SCLG6-020/030-200 | 200 | 433 | 290 |
| SCLG6-020/030-300 | 300 | 533 | 390 |
| SCLG6-020/030-400 | 400 | 633 | 490 |
| SCLG6-020/030-500 | 500 | 733 | 590 |
| SCLG6-020/030-600 | 600 | 833 | 690 |
| SCLG6-020/030-700 | 700 | 933 | 790 |
| SCLG6-020/030-800 | 800 | 1033 | 890 |
| SCLG6-020/030-900 | 900 | 1133 | 990 |
| SCLG6-020/030-A00 | 1,000 | 1233 | 1090 |

(Unit in mm)

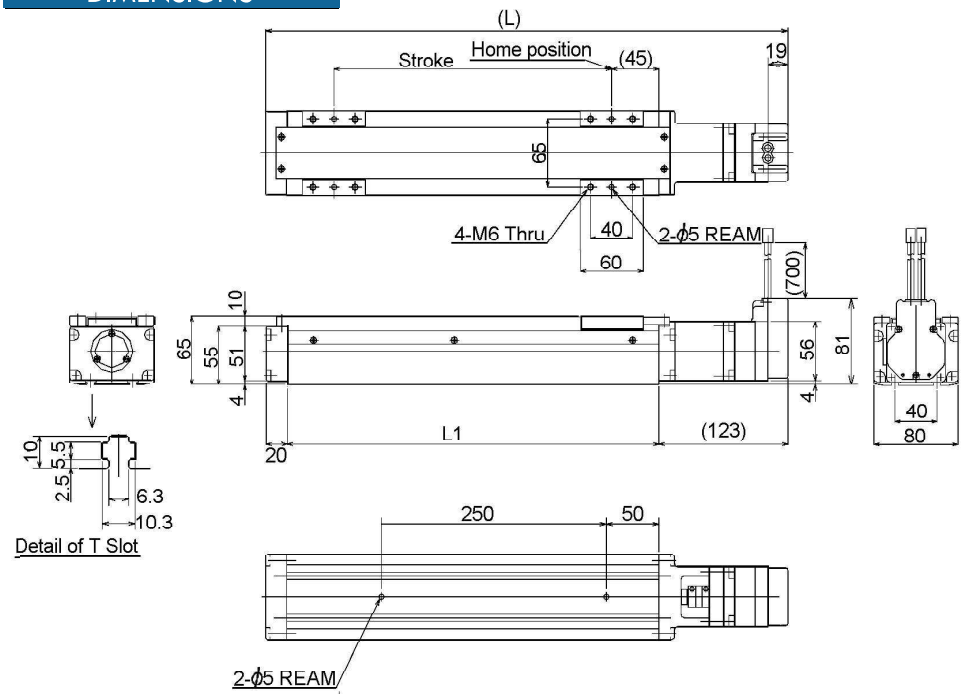


## POWER I/O CABLES

RP9120 1m-20m Lengths RP9135

RP9120 24VDC power and Input/Output signal cable for SCLG6

RP9135 extension cable for SCLG6

# Programming Tools

## Position Data Programming

### Teach Pendant
### (CTA-23-EN-SET) Kit price US$455

### FEATURES

-Easy programming with jog handle
-Jog handle has choice of standard jog and fine jog
-Handle allows data input without jog movement if desired
-Visual indication of the programming procedure
-Complete control over all actuator capabilities
-Program one actuator at a time,

***For multi synchronized actuator motion programming tool, please contact Mirai.*

### CONNECTION LAYOUT

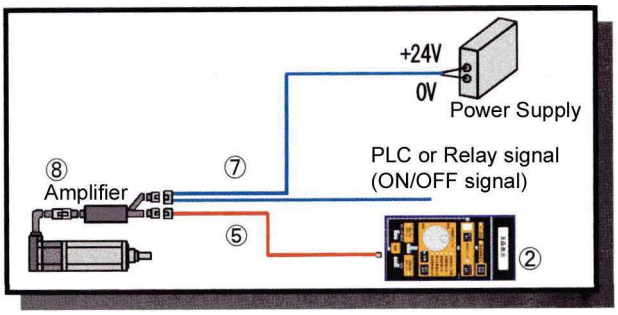


### TBVST SOFTWARE FOR PC

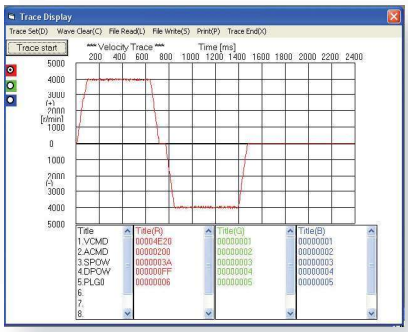


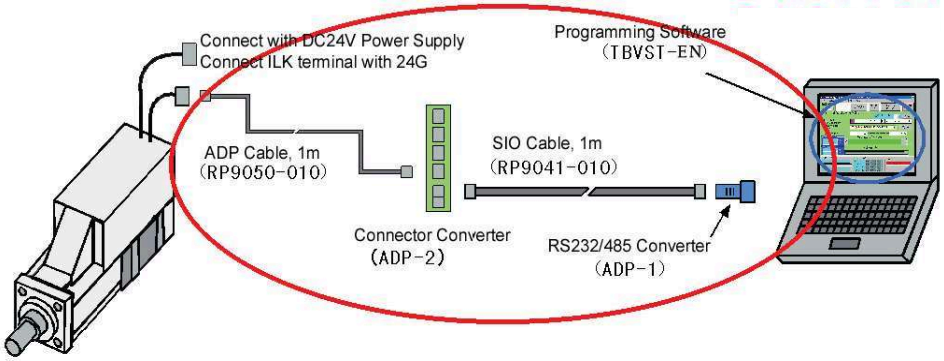


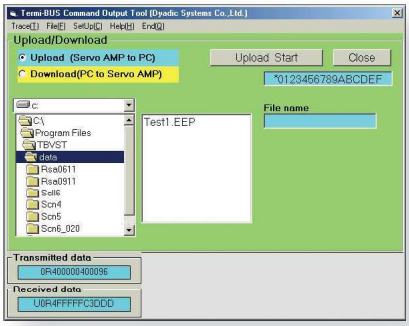


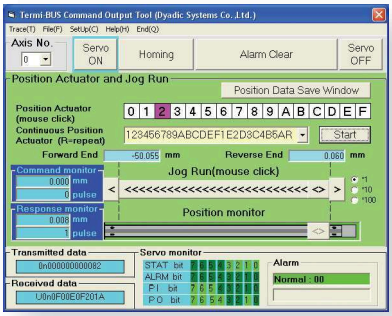


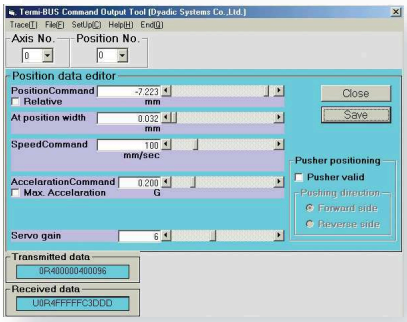


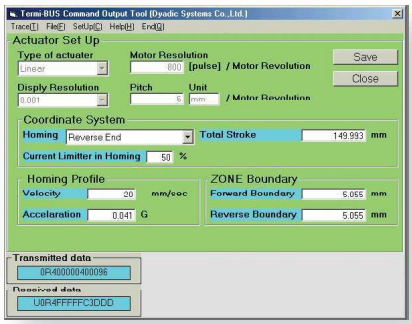


* Easy Window-based programming
* Programming with jog and data entry
* Download & Upload functions
* Actual movement result analysis function
* Able to program position parameter/data and sequence program for CTC pendants.
* Contains all software in one package (TBVT, MVST, CTA-1EX and CTCTOOL)


Sold & Serviced By:

Canadian and International Sales
ELECTROMATE
877-737-8698
sales@electromate.com
www.electromate.com

U.S. Sales
SERVO2GO.com
877-378-0240
sales@servo2go.com
www.servo2go.com

# Mechatronics Cylinder Application Notes

## Much Simpler Than An Air Cylinder

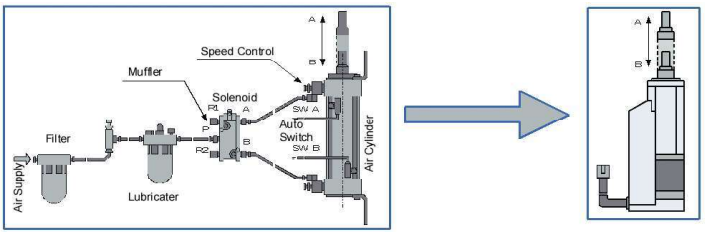


## Standard Positioning

Positioning can be programmed with speed and acceleration for each position.

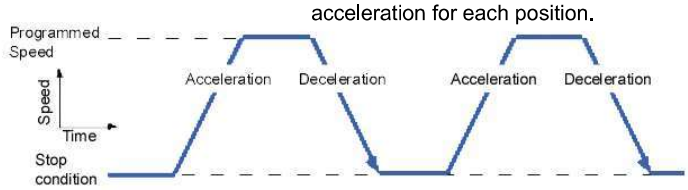


## Incremental Movement

Incremental (relative) motions can be programmed for palletizing, etc. Multiple start signal inputs can be sent during the move so that multiple increments can be combined into one smooth motion.

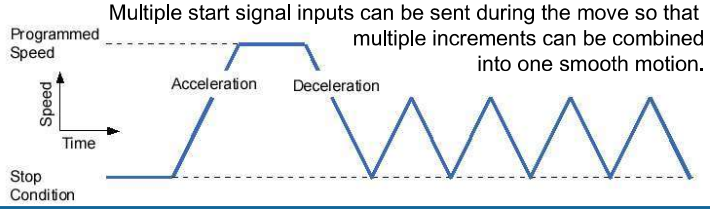


## Push Force Mode

Push force mode can be programmed with force data entry (% of max force)

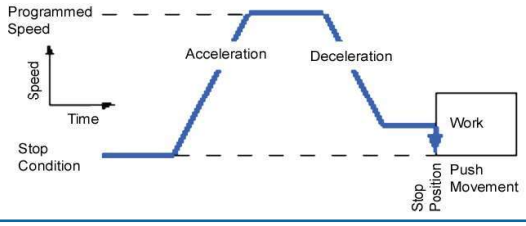


## Speed Profile

Flexible speed profiles can be programmed by changing the width of the signal complete condition

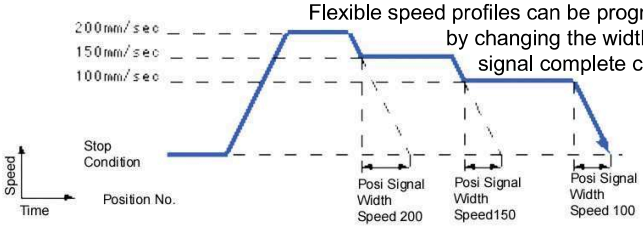


## Auto Maximum Acceleration

Ultimate acceleration can be set for the condition (load, speed) automatically and then the deceleration can be programmed.

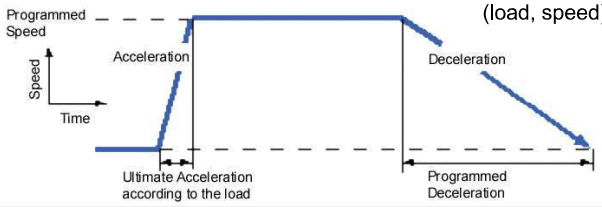


## Zone signal output

The Mechatronics Cylinder can be programmed to energize an output when it is in the desired zone. Duration of the signal can be specified.

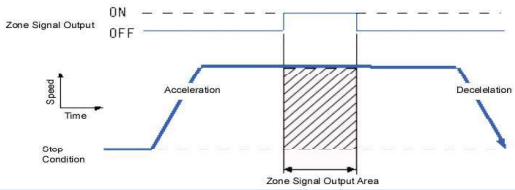


## PC-CTC Tool Kit

(TBVST-CTC-EN-SET) US$275

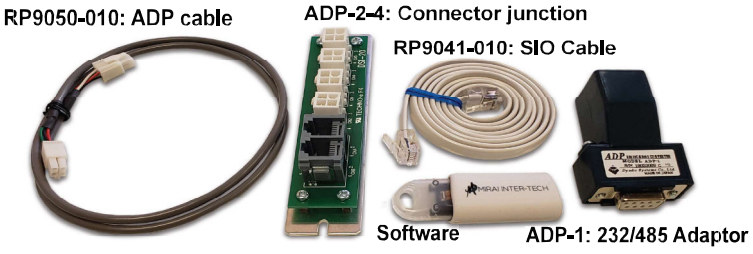


## PLC Board

(CTC-67-EN-SET) Kit price US$395

### FEATURES

- Easy programming by CTCTOOL software
- Program up to 100 steps, each with timers, I/O conditions, etc.
- Connect up to 8 actuators
- Control up to 5 axes per step
- 6 inputs/6 outputs for users

### BENEFITS

- Reduce I/O using pre-made cables
- In complex systems the PLC programming can be simplified by allowing the CTC-67 to execute subroutines selected by the PLC.
- For simple systems (lab scale, bench top), the CTC-67 can be the only controller. System elements can be easily controlled through the programmable I/O.
- Debug mode allows the user to run the sequence one step at a time.
- The time monitor function can ensure the sequence is complete in the required time.

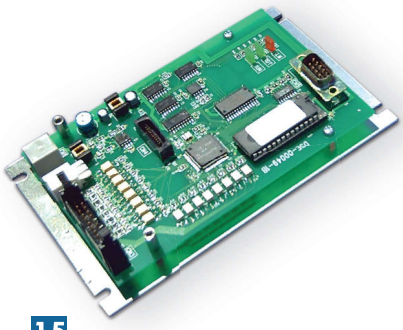

### OPTIONAL

USB-RS485-1800-9050
USB Programming Cable For PC

## Sold & Serviced By:


*Canadian and International Sales*

**ELECTROMATE**

**877-737-8698**

*sales@electromate.com*

*www.electromate.com*

*U.S. Sales*

**SERVO2GO.com**

**877-378-0240**

*sales@servo2go.com*

*www.servo2go.com*